MARECHAL electric

ATEX Approved

Ex Connectors

CE 0081

IECEx

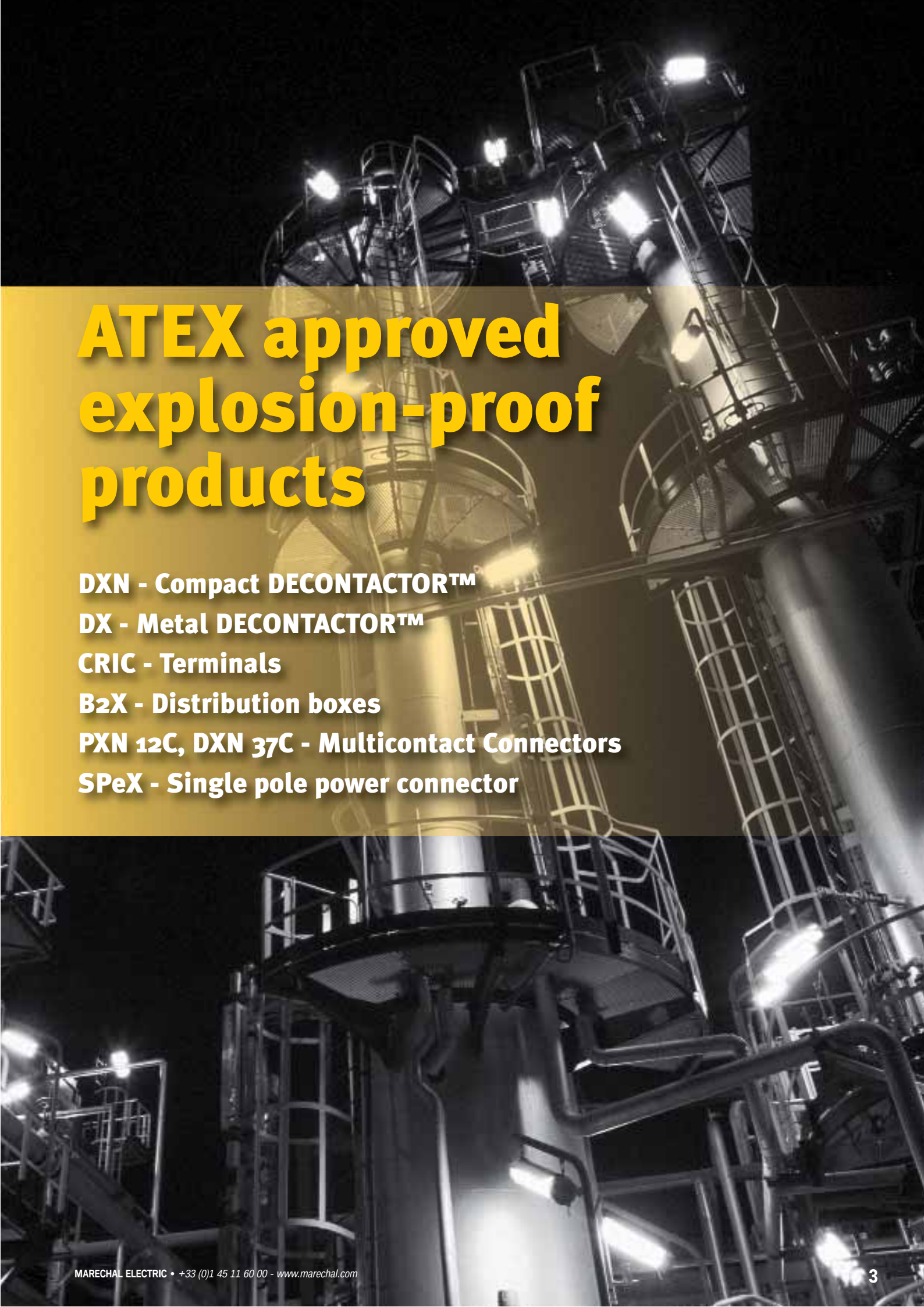

ATEX approved explosion-proof products

DXN - Compact DECONTACTOR™
DX - Metal DECONTACTOR™
CRIC - Terminals
B2X - Distribution boxes
PXN 12C, DXN 37C - Multicontact Connectors
SPeX - Single pole power connector

EXPLOSION-PROOF PRODUCTS

Introduction

Particular standards and directives apply when flammable gases, vapours or dust are likely to be present in the environment and cause an explosion.

Plugs and socket-outlets intended to operate in such environments must have obtained a certificate of conformity to these standards from an official test house, assuring that they will not cause a fire or an explosion in the surrounding atmosphere.

Standards

- IEC 60079-0: Products for use in explosive gas atmospheres - General rules
- IEC 60079-1: Explosive atmospheres - Part 1: Equipment protection by flameproof enclosures “d”.
- IEC 60079-7: Explosive atmospheres - Part 7: Equipment protection by increased safety “e”
- IEC 61241-0: Electrical apparatus for use in the presence of combustible dust - Part 0: General requirements
- IEC 61241-0: Electrical apparatus for use in the presence of combustible dust - Part 1: Protection by enclosures “tD”

Products complying with these requirements bear the symbol Ex and the marking “Ex”.

Directives

In Europe, two directives apply to explosion-proof products:

ATEX 94/9/CE Directive (ATmospheres EXplosive)

Since July 1st 2003, manufacturers may only sell products that comply with the ATEX 94/9/CE Directive. This directive sets the essential safety requirements and imposes a classification of the products in categories, depending on their level of protection. A distinction is now made according to the nature of the explosive atmosphere: gas or dust.

This directive requires:

- For products: a type certification, a declaration of conformity and an instruction manual, allowing to affix the CE marking,
- For the manufacturers: a quality assurance system audited annually by a notified body, and the designation of an authorised person called the ATEX Manager.

1999/92/CE Directive

Since July 1st 2003, this directive imposes on users of explosion-proof products:

- To evaluate the risk of explosion on their site, to define zones and to implement minimum guidelines to ensure workers’ safety,
- To purchase only products according to ATEX 94/9/CE directive for new installations as well as extensions to existing installations.

Products designed according to the harmonised standards are deemed to comply with the essential safety and health requirements set in the ATEX Directive.

Protection mode(s)

Depending on the type of product, there are several modes of protection intended to eliminate the risk of explosion: increased safety “e”, internal overpressure “p”, oil immersion “o”, explosion-proof chamber “d”, powder filling “q”, encapsulation “m”, etc.

Whatever the protection mode(s), products intended to operate in potentially explosive atmospheres must:

- Prevent the formation of an arc likely to cause an explosion,
- Resist shocks, to a higher degree than that is required for normal industrial products,
- Not be likely to accumulate electrostatic charges that may generate a spark,
- Have, within an ambient temperature range of at least -20 °C / +40 °C, a surface temperature below the self ignition temperature of the surrounding atmosphere or of the layer of dust that may have accumulated on the product.

Protection mode for plugs and socket-outlets

Plugs and socket-outlets with integral switching comprise two distinct areas, that require the implementation of two different modes of protection:

- An area which contains the contacts used to establish and break the current and where arcs or sparks occur in normal operation when a plug is inserted or withdrawn. This area requires a “d” explosion-proof chamber in order to contain the arc, to resist the overpressure of an internal explosion and to laminate the flame of this explosion so that it does not propagate to the surrounding atmosphere,

- Areas where there are no arcs or sparks, where conductors are connected to the plug and socket-outlet terminals. These areas use the mode of protection increased safety “e”, to prevent any failure.

Plugs and socket-outlets without integral switching use the sole mode of protection by increased safety “e”. They are fitted with a locking device and warning labels to prevent any accidental disconnection under load.

“d” explosion-proof enclosure

The arc chamber that contains the contacts used to make and break the circuit must constitute an explosion-proof enclosure, resisting the effects of a possible internal explosion. IEC 60079-1 standard defines the characteristics of such a ‘d’ explosion-proof chamber that must:

- Resist the pressure of an explosion,
- Allow this pressure to escape through interstices precisely rated in length and thickness, in order to extinguish the flame so that it does not reach the outside of the enclosure.

These safety experimental maximum interstices, also called flamepath, are defined according to the explosive substance and the internal volume of the envelope.

DXN1 plug and socket-outlet interior mouldings and contacts: the various flamepaths (in red) extinguish the flame and allow expulsion of burnt gases in case of an explosion when an arc strikes.

Eg: in an environment that may contain Acetylene and with an inner volume less than to 100 cm³, the minimum length of the flamepath is 6 mm and the maximum interstice is 0.1 mm.

“e” increased safety

The expensive requirements of the “d” mode of protection are not necessary for the parts of the product where conductors are terminated plug side and socket-outlet side as well as for plugs and socket-outlets that are not likely to create a spark. Particular precautions, called increased safety “e”, are anyhow required in order to:

- Provide proper termination of cables in the enclosures,
- Not to damage conductors on tightening and to prevent the loosening of terminals in case of shock, vibration, thermal cycling or conductor yielding,
- Prevent short-circuits by defining air and creepage distances larger than those required from industrial products.

Plugs and socket-outlets, which combine explosion proof “d” chambers for the switching contacts and increased safety for cables and conductors termination, are identified by the symbol **Ex de**.

DXN: a captive pad protrudes into the terminal chamber to protect the strands of the conductors from contact with the tightening screw

Plugs and socket-outlets whose sole mode of protection is increased safety are identified by the symbol **Ex e**.

Protection mode tD against dust

Plugs and socket-outlets intended for use in the presence of flammable dust, either in suspension or accumulated, must be protected against dust ingress.

They must bear details of their maximum surface temperature, in a given range of ambient temperatures (Ta), taking into account the layer of dust that may accumulate.

This mode of protection by dust-proof envelope is identified by the symbol tD A21 (formerly DIP: Dust Ignition Proof) completed by the IP rating.

Example of marking:	Ex tD A21 IP6X T66 °C -40 °C ≤ Ta ≤ +60 °C

Product Groups

Electrical products are classified according to the inner volume of their explosion-proof chamber, if any, and the dimensions of their flame path, in group I, IIA, IIB and IIC, to chemical products having similar explosive characteristics.

- Plugs and socket-outlets of Group I are suitable for firedamp mines (natural methane).
- Plugs and socket-outlets of Group II are intended for surface applications.
- Group II is divided in IIA, IIB and IIC, corresponding to a decreasing tolerance of the flame path in such a way that a IIC product is automatically suitable for groups IIA and IIB.
  - Group IIA: Accessories intended to operate in presence of the less explosive substances: industrial methane, propane, butane, benzene, kerosene, gasoline, ethanol, acetone ...
  - Group IIB: ethylene, methacrylate, cyclopropane ...
  - Group IIC: Accessories intended to operate in presence of the most explosive substances: hydrogen, acetylene, ethyl nitrate ...

The marking of "de" products (DXN, DX, PX) is completed by the indication of their group, according to their flame path and inner volume, e.g. **Ex de IIC**.

The marking of "e" products (PXN12C, DXN37C, SPeX) is completed by the sole indication of group II as they have no flame path and inner volume which determine the sub-group, e.g. **Ex e II**. They can be used in the presence of all gases (except natural methane in mines that requires group I products).

Product categories and explosive zones

There are three categories of products, corresponding to six explosive zones, gas or dust:

- **Products in category 1** are intended for Zone 0 (gas) and/or Zone 20 (dust): zones with a permanent explosive atmosphere. These zones cannot be equipped with socket-outlets.
- **Products in category 2** are intended for Zone 1 (gas) and/or Zone 21 (dust): zones where an explosive atmosphere is likely to appear in normal operation. These zones can be equipped with Ex socket-outlets.
- **Products in category 3** are intended for Zone 2 (gas) and/or Zone 22 (dust): zones where an explosive atmosphere may only appear accidentally, in case of malfunction of the installation. These zones can be equipped with Ex socket-outlets.

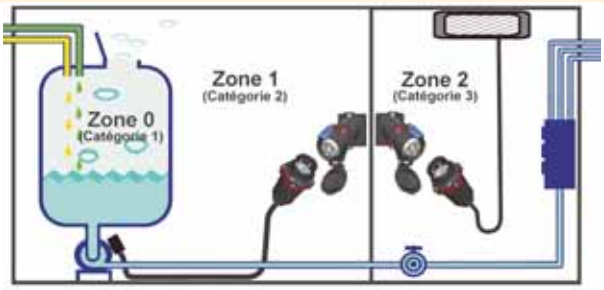

Considering the increasing risk, products of category 2 can be used where products of category 3 are required.

The marking on the product is completed by the indication of their permitted zones.

Eg: 2G = zones 1 & 2
3D = zone 22
2G/D = zones 1, 2, 21 & 22

PRODUCT CATEGORY According to 94/9/CE Directive	ZONES	
	Flammable gas, vapour or mist	Cloud of flammable dust
Category 1: Permanent or frequent presence	Zone 0 No socket-outlet	Zone 20 No socket-outlet
Category 2: Occasional (normal) presence	Zone 1 2G or 2G/D socket-outlet	Zone 21 2D or 2G/D socket-outlet
Category 3: Irregular / short term presence (abnormal)	Zone 2 3G or 3G/D socket-outlet	Zone 22 3D or 3G/D socket-outlet

Ex II2 G/D means that the accessory can be used in zones 1, 2, 21 & 22

Gas Temperature classes

All chemicals listed in the various groups have a specific self-ignition temperature.

Electrical products must bear details of their maximum surface temperature, in a specified maximum ambient temperature (Ta).

Indication is given by a capital "T" followed by a number from 1 to 6, in decreasing order of temperature:

CATEGORY	MAXIMUM SURFACE TEMPERATURE
T6	≤ 85 °C*
T5	≤ 100 °C
T4	≤ 135 °C
T3	≤ 200 °C
T2	≤ 300 °C
T1	< 450 °C

* As an example, a T6 classification at 40 °C means that the maximum heating will be 40 K with 5 K safety margin, in an ambient temperature of 40 °C. The maximum surface temperature of the device must be less than the temperature of self-ingnition of the gas found in the hazardous area.

Dust surface temperature marking

Flammable dust has a specific self-ignition temperature.

Electrical products must bear the indication of their maximum surface temperature, in a specified maximum ambient temperature (Ta). This temperature takes into account the layer of dust likely to accumulate on the accessory.

Indication is given by a capital "T" followed by the surface temperature in °C, to distinguish it from the gas temperature class, e.g. T107 °C.

Example of markings

Listed manufacturer and production site

MARECHAL ELECTRIC MAROMME

Ex II2 G/D Ex de IIC tD A21

-40 °C ≤ Ta ≤ +40 °C T6 T46 °C

-40 °C ≤ Ta ≤ +60 °C T5 T66 °C

LCIE 07 ATEX 6027 X / LCIE Ex 99.007 X

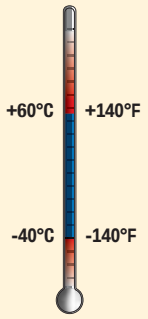

Ex	Accessory intended for explosive atmospheres
II	Accessory of group II = surface applications
2	Accessory of category 2 = for zones 1 and/or 21
G/D	Nature of atmosphere: G: Gas and D: dust
Ex	Protection against explosions 'Gas' standards: IEC/EN 60079-0, -1 & -7 'Dust' standards: EN 61241-0 & -1
de	Combined protection mode d & e d: explosion-proof enclosure (IEC/EN 60079-0 & -1) e: increased safety (IEC/EN 60079-0 & -7)
IIC	Accessory of group IIC: (Hydrogen, acetylene, ethyl nitrate)
tD	Mode of protection against dust: tD = protection by enclosure
A21	IP test for zone 21: IP6X

T5/T6	Gas surface temperature T6 : ≤ 85 °C with Ta between -40 °C and +40 °C T5 : ≤ 100 °C with Ta between -40 and +60 °C
T °C	Dust surface temperature Surface T° ≤ 46 °C with Ta between -40 °C & +40 °C Surface T°≤ 66 °C with Ta between -40 °C & +60 °C
6027	ATEX certificate number provided by notified body (LCIE-Veritas)
99.007	Certificate of conformity to IEC standards delivered by notified body (LCIE-Véritas)
X	Indication of particular condition(s) of use, if any

These markings are completed with the following indications:

Week / year of manufacture - Type

Contact configuration – main circuit
Assigned voltage
Nominal current

CE marking = compliance with European directives
Identification of the notified body
(0081 = LCIE-Véritas)

24/09 TYPE DXN37C

36C+T
Ue = 220 V 50 Hz
Ie = 10 A

CE 0081 Pos. 01 IP66/IP67

Contact configuration secondary circuit (if any)

Keying position
IP rating

DXN

20 A
32 A
63 A

- **Explosive atmospheres**
- **IP66/IP67 as standard**
- **Compact & robust design**
- **Safe & easy operation**

SPECIFICATION

IP66/IP67 plug and socket-outlet for explosive atmospheres (ATEX) with integral switching device, comply with BECMA international standard.

Product technical data sheet at: www.marechal.com

DXN decontactors are designed for explosive atmospheres, with 'de' protection mode. They comply with the ATEX 94/9/CE & 99/92/CE directives. They can be used in zones 1 & 2 (Gas) and zones 21 & 22 (Dust). They are certified according to IEC Ex.

Mechanical features

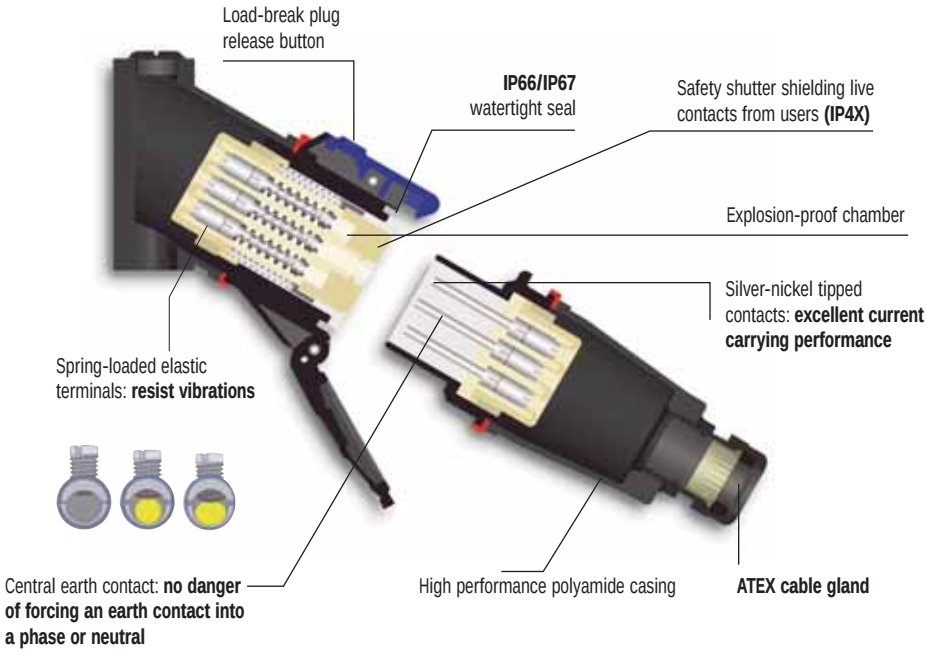

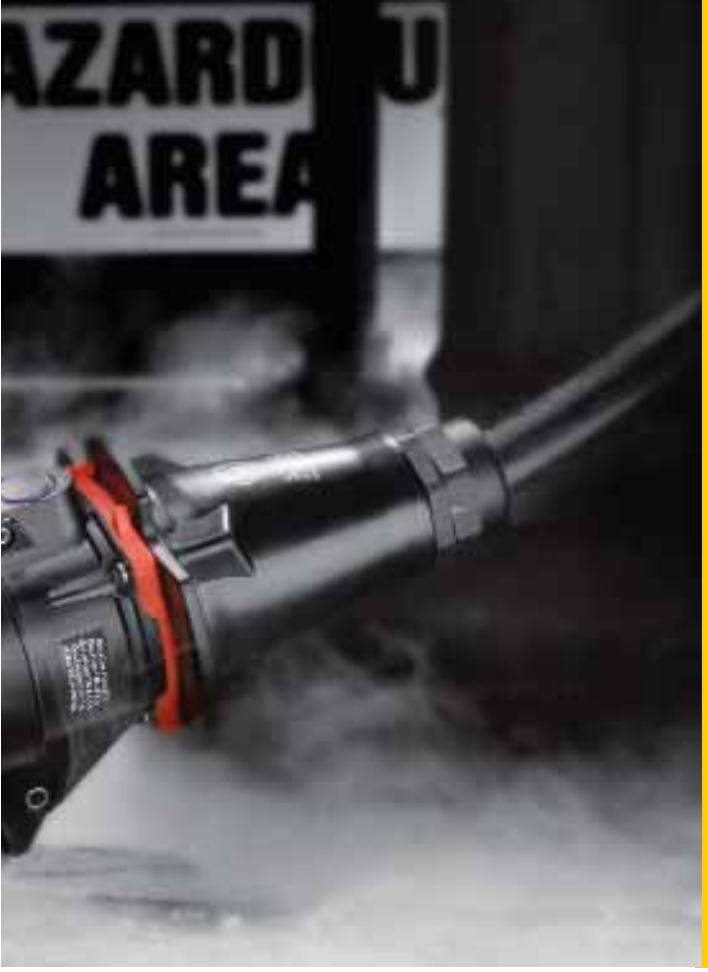

COMPACT Ex DECONTACTOR™


Equipment on oil rig


Sugar silo conveyor


Gas detection equipment


Machines in a dust-laden atmosphere

Technical features

Plugs and sockets with load-break capability (integral switching device according to article 2.8 of EN 60309-1)

	DXN1	DXN3	DXN6
Rated current (In)	20 A	32 A	63 A
Umax	550 V	750 V	750 V
Auxiliary contacts (optional)	-	2	2
Keying positions ([1])	24	24	24
Ambient temperature	See sticker - for all DXN range		
Protection	“de”	“de”	“de”
ATEX zones	Zones 1 & 2 (gas) Zones 21 & 22 (dusts) - for all DXN range		

([1]) To discriminate between different power supplies and applications

Regulatory features

DXN decontactors comply with:

- The ATEX 94/9/CE directive,
- CEI 60079-0 (2006), CEI 60079-1 (2003), CEI 60079-7 (2006), CEI 61241-0 (2004) & CEI 61241-1 (2004) International standards,
- CEI 60309-1 & CEI 60309-4 European and International standards (plugs and socket-outlets for industrial purposes),
- The European Low Voltage Directive 2006/95/CE,
- The European ‘Machine Directive’ regarding equipment isolation,
- The French NF C 15-100 standard,
- The French decree n°88-1056 dated 14th November 1988,
- The decrees relating to workers’ protection in Belgium, Spain and Italy.

Also certified by VERITAS LCIE, AS and CSA (French, Australian and US & Canadian*) and by BUREAU VERITAS MARINE inspection laboratories.

(*) for North-American markets.

DXN1

DECONTACTOR™

HIGH PERFORMANCE POLY CASING

up to 20 A

IP66 IP67

Typical configuration:

Wall mounting socket

Wall box poly 70°
25 1A B58

+

Socket-outlet
25 14 017

Plug

Straight handle poly
25 1A 753

+

Inlet (with cap)
25 18 017

Plugs and sockets with load-break capability (integral switching device according to article 2.8 of EN 60309-1)

Main features:

Rated current (with wiring according to standard)	20 A
Maximum voltage	550 V
IP protection lid closed	IP66/IP67
IP protection connected plug	IP66/IP67
Resistance to shocks	IK08

Flexible wiring (min - max)	1 - 4 mm²
Stranded wiring (min - max)	1,5 - 6 mm²
Other wiring on request	
Keying positions	24
Protection mode	de
ATEX zones	1 & 2, 21 & 22

Ambient temperature:

Gas temperature classes	T6 : surface T° ≤ 85 °C for an ambient T° between -40 and +40 °C
	T5 : surface T° ≤ 100 °C for an ambient T° between -40 and +60 °C
Dust surface temperature classes	surface T° ≤ 70 °C for an ambient T° between -40 and +40 °C
	surface T° ≤ 90 °C for an ambient T° between -40 and +60 °C
Comply with EN 60309-1	20 A / 550 V

Other voltages and polarities are available on request

Socket-outlet (female)

Voltage 50 Hz	Polarity	Part no.
20 - 24 V	2P	25 14 08A
110 - 130 V	1P+N+E	25 14 035
220 - 250 V	**1P+N+E**	**25 14 015**
380 - 440 V	**3P+E**	**25 14 013**
380 - 440 V	**3P+N+E**	**25 14 017**
480 - 500 V	3P+E	25 14 093
480 - 500 V	3P+N+E	25 14 097

Inlet with cap (male)

Voltage 50 Hz	Polarity	Part no.
20 - 24 V	2P	25 18 08A
110 - 130 V	1P+N+E	25 18 035
220 - 250 V	**1P+N+E**	**25 18 015**
380 - 440 V	**3P+E**	**25 18 013**
380 - 440 V	**3P+N+E**	**25 18 017**
480 - 500 V	3P+E	25 18 093
480 - 500 V	3P+N+E	25 18 097

MARECHAL ELECTRIC MAROMME
Ⓔx II2 G/D Ex de IIC tD A21
-40 °C ≤ Ta ≤ +60 °C T5 T90 °C
-40 °C ≤ Ta ≤ +40 °C T6 T70 °C
IECEx LCI 09.0005X / LCIE 99 ATEX 6027 X

Boxes

Ex cable gland included

	Wall box poly 30°		Wall box poly 70° *	
Ex cable gland				
M20	**25 1A B53**	10 - 14 mm	**25 1A B58**	10 - 14 mm
M25			25 1A B58 25P	12,5 - 18,5 mm
M32			25 1A B58 32P	18 - 25 mm

** For alternatives with Earth continuity or several entries, please contact us*

Sleeves

	Inclined poly 30°	Inclined poly 70°
	25 1A 027	**25 1A 757**

Handle

Ex cable gland included

	Straight poly	
Ex cable gland		
M20	**25 1A 753**	10 - 14 mm
M25	25 1A 253 25P	12,5 - 18,5 mm
M32	25 1A 253 32P	18 - 25 mm

Bold type part no.: see dimensions on pages 16 & 17.

Options & accessories

	Part no.
180° opening lid	Socket no. + 10
Self-returning lid	Socket no. + R
180° opening and self-returning lid	Socket no. + 18

Locking with 3 padlocks (Ø 4 mm) with shaft (padlocks not supplied)
Socket no. + 844

IP67 inlet cap
25 1A 126

Handle or Box equipped with ATEX metal entry with Earth continuity.
Handle : 25 1A 253 Z0405
Box : *Consult us*

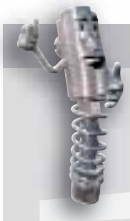

Compatibility with DSN1 socket

The DXN1 'de' plugs (20 A) can be connected to the industrial DSN1 (20 A) socket-outlet and coupler sockets.
Thus, you can move mobile Ex devices equipped with a DXN1 plug in and out of your Ex zones.
Consult us.

Disconnect safely

Our contact design allows decontactors to be disconnected quickly and safely.

DXN3

DECONTACTOR™

HIGH PERFORMANCE POLY CASING

up to 32 A

IP66 IP67

Typical configuration:

Wall mounting socket

Wall box poly 70°
25 3A B58

+

Socket-outlet
25 34 017

Plug

Straight handle poly
25 3A 753

+

Inlet
25 38 017

Plugs and sockets with load-break capability (integral switching device according to article 2.8 of EN 60309-1)

Main features:

Rated current (with wiring according to standard)	32 A
Maximum voltage	750 V
IP protection lid closed	IP66/IP67
IP protection connected plug	IP66/IP67
Resistance to shocks	IK08

Flexible wiring (min - max)	2,5 - 10 mm²
Stranded wiring (min - max)	2,5 - 16 mm²
Other wiring on request	
Keying positions	24
Protection mode	de
ATEX zones	1 & 2, 21 & 22

Ambient temperature:

Gas temperature classes	T6 : surface T° ≤ 85 °C for an ambient T° between -40 and +40 °C
	T4 : surface T° ≤ 135 °C for an ambient T° between -40 and +60 °C
Dust surface temperature classes	surface T° ≤ 78 °C for an ambient T° between -40 and +40 °C
	surface T° ≤ 98 °C for an ambient T° between -40 and +60 °C
Comply with EN 60309-1	32 A / 750 V

Other voltages and polarities are available on request

Socket-outlet
(female)

Voltage 50 Hz	Polarity	Part no.
20 - 24 V	2P	25 34 08A
110 - 130 V	1P+N+E	25 34 035
220 - 250 V	**1P+N+E**	**25 34 015**
380 - 440 V	**3P+E**	**25 34 013**
380 - 440 V	**3P+N+E**	**25 34 017**
480 - 500 V	3P+E	25 34 093
480 - 500 V	3P+N+E	25 34 097

Inlet
(male)

Voltage 50 Hz	Polarity	Part no.
20 - 24 V	2P	25 38 08A
110 - 130 V	1P+N+E	25 38 035
220 - 250 V	**1P+N+E**	**25 38 015**
380 - 440 V	**3P+E**	**25 38 013**
380 - 440 V	**3P+N+E**	**25 38 017**
480 - 500 V	3P+E	25 38 093
480 - 500 V	3P+N+E	25 38 097

Socket-outlet with auxiliary contacts (Maximum voltage 550 V)

With 2 auxiliary contacts (5 A / 550 V)	Socket no. + 972

Inlet with auxiliary contacts (Maximum voltage 550 V)

With 2 auxiliary contacts (5 A / 550 V)	Inlet no. + 972

MARECHAL ELECTRIC MAROMME
Ⓔx II2 G/D Ex de IIC tD A21
-40 °C ≤ Ta ≤ +60 °C T4 T98 °C
-40 °C ≤ Ta ≤ +40 °C T6 T78 °C
IECEx LCI 09.0006 / LCIE 05 ATEX 6149

Boxes

Ex cable gland included

	Wall box poly 30°		Wall box poly 70° *	
Ex cable gland				
M20	25 3A B53	10 - 14 mm	25 3A B58 20P	10 - 14 mm
M25	**25 3A B53 25P**	12,5 - 18,5 mm	**25 3A B58**	12,5 - 18,5 mm
M32			25 3A B58 32P	18 - 25 mm

** For alternatives with Earth continuity or several entries, please contact us*

Sleeves

	Inclined poly 30°	Inclined poly 70°
	25 3A 027	**25 3A 757**

Handle

Ex cable gland included

	Straight poly	
Ex cable gland		
M20	**25 3A 753**	10 - 14 mm
M25	**25 3A 783**	12,5 - 18,5 mm
M32	25 3A 253 32P	18 - 25 mm
M40	25 3A 253 40P	24 - 34 mm

** For alternatives with Earth continuity, please contact us*

Bold type part no.: see dimensions on pages 16 & 17.

Options & accessories

	Part no.
180° opening lid	Socket no. + 10
Self-returning lid	Socket no. + R
180° opening and self-returning lid	Socket no. + 18

Locking with 3 padlocks (Ø 4 mm) with shaft (padlocks not supplied)

Socket no. + 844

IP67 inlet cap

25 3A 126

Portable stainless steel box 'de'

Consult us

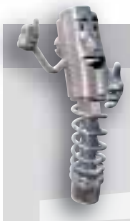

Compatibility with DSN3 socket

The DXN3 'de' plugs (32 A) can be connected to the industrial DSN3 (32 A) socket-outlet and coupler sockets.
Thus, you can move mobile Ex devices equipped with a DXN3 plug in and out of your Ex zones.
Consult us.

Zoom B2X

B2X distribution boxes can be equipped with:
- 2 DXN1, or
- 1 DXN1 and 1 DXN3

DXN6

DECONTACTOR™

HIGH PERFORMANCE POLY CASING

up to 63 A

IP66 IP67

Typical configuration:

Wall mounting socket

Wall box poly 70°
25 6A B58

+

Socket-outlet
25 64 017

Plug

Straight handle poly
25 6A 753

+

Inlet
25 68 017

Plugs and sockets with load-break capability (integral switching device according to article 2.8 of EN 60309-1)

Main features:

Rated current (with wiring according to standard)	63 A
Maximum voltage	750 V
IP protection lid closed	IP66/IP67
IP protection connected plug	IP66/IP67
Resistance to shocks	IK08

Flexible wiring (min - max)	6 - 16 mm²
Stranded wiring (min - max)	6 - 25 mm²
Other wiring on request	
Keying positions	24
Protection mode	de
ATEX zones	1 & 2, 21 & 22

Ambient temperature:

Gas temperature classes	T5 : surface T°≤ 100 °C for an ambient T° between -40 and +40 °C
	T4 : surface T°≤ 135 °C for an ambient T° between -40 and +60 °C
Dust surface temperature classes	surface T° ≤ 87 °C for an ambient T° between -40 and +40 °C
	surface T° ≤ 107 °C for an ambient T° between -40 and +60 °C
Comply with EN 60309-1	63 A / 750 V

Other voltages and polarities are available on request

Socket-outlet
(female)

Voltage 50 Hz	Polarity	Part no.
20 - 24 V	2P	25 64 08A
110 - 130 V	1P+N+E	25 64 035
220 - 250 V	**1P+N+E**	**25 64 015**
380 - 440 V	**3P+E**	**25 64 013**
380 - 440 V	**3P+N+E**	**25 64 017**
480 - 500 V	3P+E	25 64 093
480 - 500 V	3P+N+E	25 64 097

Inlet
(male)

Voltage 50 Hz	Polarity	Part no.
20 - 24 V	2P	25 68 08A
110 - 130 V	1P+N+E	25 68 035
220 - 250 V	**1P+N+E**	**25 68 015**
380 - 440 V	**3P+E**	**25 68 013**
380 - 440 V	**3P+N+E**	**25 68 017**
480 - 500 V	3P+E	25 68 093
480 - 500 V	3P+N+E	25 68 097

Socket-outlet with auxiliary contacts (Maximum voltage 550 V)

With 2 auxiliary contacts (5 A / 550 V)	Socket no. + 972

Inlet with auxiliary contacts (Maximum voltage 550 V)

With 2 auxiliary contacts (5 A / 550 V)	Inlet no. + 972

MARECHAL ELECTRIC MAROMME
Ⓔx II2 G/D Ex de IIC tD A21
-40 °C ≤ Ta ≤ +60 °C T4 T107 °C
-40 °C ≤ Ta ≤ +40 °C T5 T87 °C
IECEx LCI 09.0007 / LCIE 05 ATEX 6150

Boxes

Ex cable gland included

	Wall box poly 30°		Wall box poly 70° *	
Ex cable gland				
M20			25 6A B58 20P	10 - 14 mm
M25	**25 6A B53**	12,5 - 18,5 mm	25 6A B58 25P	12,5 - 18,5 mm
M32			**25 6A B58**	18 - 25 mm
M40			25 6A B58 40P	24 - 34 mm

** For alternatives with Earth continuity or several entries, please contact us*

Sleeves

Inclined poly 30°	Inclined poly 70°
25 6A 027	**25 6A 757**

Handle

Ex cable gland included

	Straight poly	
Ex cable gland		
M20	25 6A 253 20P	10 - 14 mm
M25	**25 6A 753**	12,5 - 18,5 mm
M32	25 6A 253 32P	18 - 25 mm
M40	25 6A 253 40P	24 - 34 mm

** For alternatives with Earth continuity, please contact us*

Bold type part no.: see dimensions on pages 16 & 17.

Options & accessories

	Part no.
180° opening lid	Socket no. + 10
Self-returning lid	Socket no. + R
180° opening and self-returning lid	Socket no. + 18

Locking with 3 padlocks (Ø 4 mm) with shaft (padlocks not supplied)

Socket no. + 844

IP67 inlet cap

25 6A 126

Handle or Box equiped with ATEX metal entry with Earth continuity.

Consult us

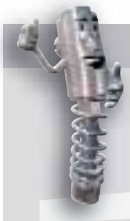

DXN6 as distribution box

ZOOM

DXN3 & DXN6 with 2 auxiliary contacts

ZOOM

2 auxiliary contacts are available for signal and control purposes, as well for auxiliary circuits such as warning lights.

DXN range dimensions

Socket-outlet + Plug

- Yß and Zß = 180° opening lid (165° for DXN1)
- ØD = Maximum bore diameter

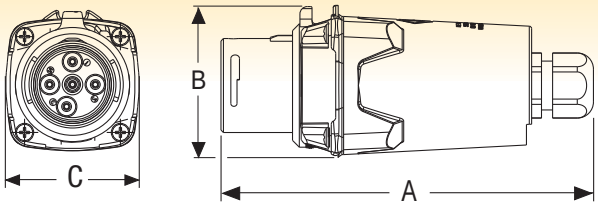

Plug

	A	B	C
DXN1	151	61	58
DXN3	158	74	70
DXN6	190	88	80

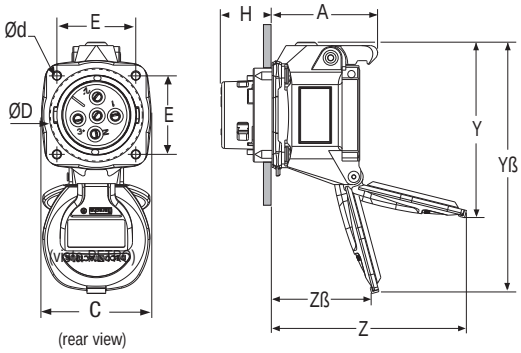

Socket-outlet

	A	C	E	H	Y	Yß	Z	Zß	Ød	ØD max.
DXN1	56	58	42	27	89	134	104	53	4,5	51
DXN3	76	74	48	29	152	179	109	27	5	57
DXN6	79	84	55	30	122	195	150	50	5	68

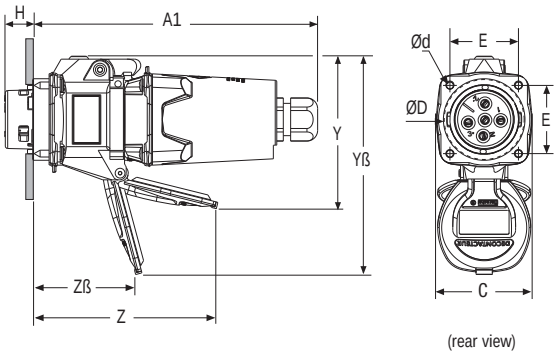

Plug connected in a socket-outlet

	A1	C	E	H	Y	Yß	Z	Zß	Ød	ØD max.
DXN1	165	58	42	27	89	134	104	53	4,5	51
DXN3	184	74	48	29	152	179	109	27	5	57
DXN6	218	84	55	30	122	195	150	50	5	68

DXN1 Range

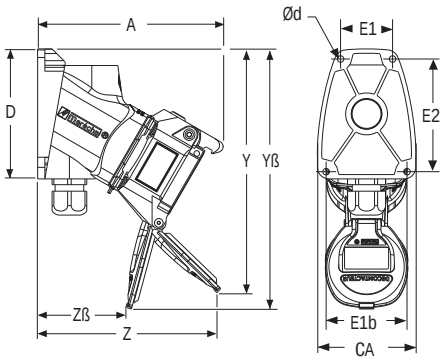

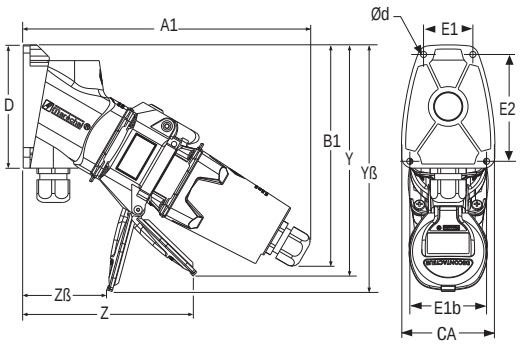

DXN3 / DXN6 Ranges

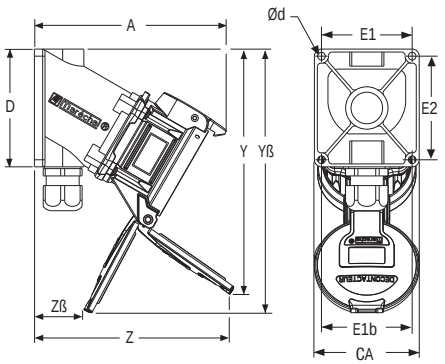

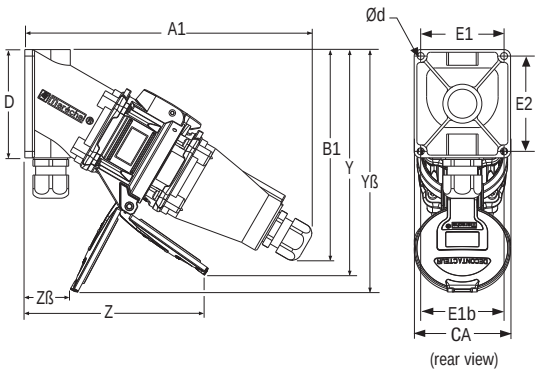

30° wall mounting socket

	A	CA	D	E1	E1b	E2	Y	Yß	Z	Zß	Ød
DXN1	129	68	90	36	56	78	166	180	127	61	4,5
DXN3	145	84	84	70	-	70	205	189	101	16	6
DXN6	162	89	100	77	-	88	209	225	165	41	6,5

Plug connected in a 30° wall mounting socket

	A1	B1	CA	D	E1	E1b	E2	Y	Yß	Z	Zß	Ød
DXN1	209	162	68	90	36	56	78	166	180	127	61	4,5
DXN3	221	161	84	84	70	-	70	205	189	101	16	6
DXN6	265	195	89	100	77	-	88	209	225	165	41	6,5

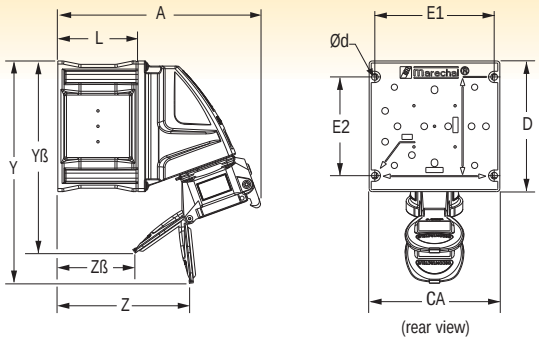

70° wall mounting socket

	A	CA	D	E1	E2	L	Y	YB	Z	ZB	Ød
DXN1	198	128	128	116	96	78	216	187	132	73	6,5
DXN3	210	128	128	116	96	78	242	177	81	29	6,5
DXN6	234	170	170	158	139	78	303	240	146	43	6,5

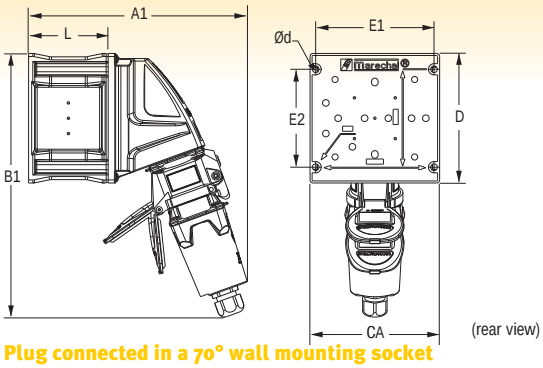

Plug connected in a 70° wall mounting socket

	A1	B1	CA	D	E1	E2	L	Ød
DXN1	214	258	128	128	116	96	78	6,5
DXN3	214	277	128	128	116	96	78	6,5
DXN6	249	347	170	170	158	139	78	6,5

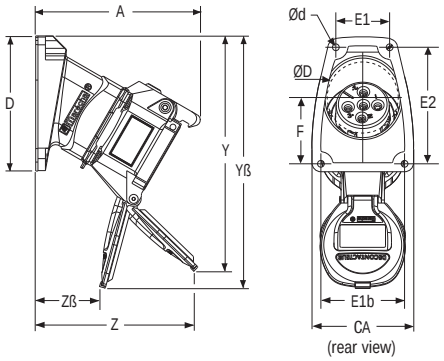

DXN1 Range

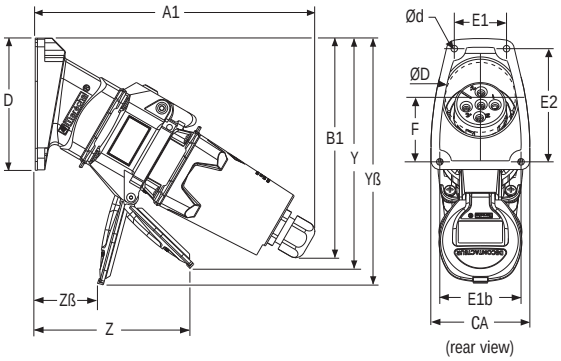

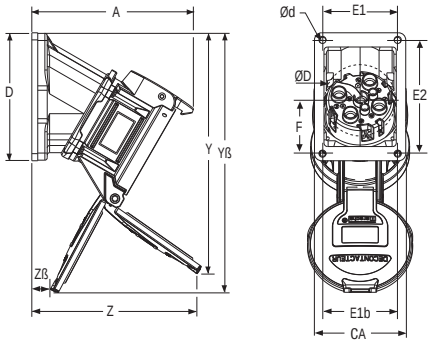

DXN3 / DXN6 Ranges

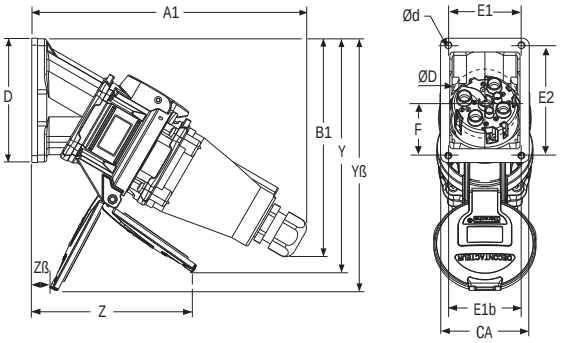

30° inclined socket

	A	CA	D	E1	E1b	E2	F	Y	YB	Z	ZB	Ød	ØD max.
DXN1	111	68	90	36	56	78	44	154	169	109	43	4,5	48
DXN3	129	77	108	63	-	95	37	211	195	85	0,1	5,5	60
DXN6	136	77	108	64	-	95	40	203	219	139	16	5,5	60

Plug connected in a 30° inclined socket

	A1	B1	CA	D	E1	E1b	E2	F	Y	YB	Z	ZB	Ød	ØD
DXN1	191	150	68	90	36	56	78	44	154	169	109	43	4,5	48
DXN3	205	167	77	108	63	-	95	37	211	195	85	0,1	5,5	60
DXN6	239	190	77	108	64	-	95	40	203	219	139	16	5,5	60

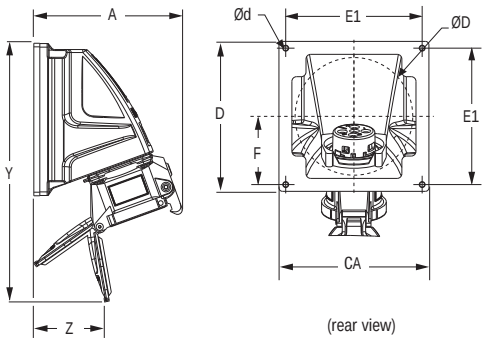

70° inclined socket

	A	CA	D	E1	F	Y	Z	Ød	ØD max.
DXN1	125	128	128	116	58	216	59	5	100
DXN3	137	128	128	116	58	242	8	5	100
DXN6	161	170	170	159	79,5	303	74	5	145

Note : pour le DXN3, ouverture du couvercle à 180° IMPOSSIBLE

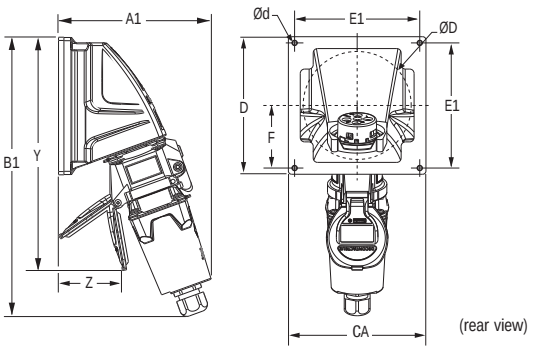

Plug connected in a 70° inclined socket

	A1	B1	CA	D	E1	F	Y	Z	Ød	ØD max.
DXN1	141	259	128	128	116	58	216	59	5	100
DXN3	141	278	128	128	116	58	242	8	5	100
DXN6	176	347	170	170	159	79,5	303	74	5	145

Note : pour le DXN3, ouverture du couvercle à 180° IMPOSSIBLE

Coupler socket + inlet

- **Yß and Zß = 180° opening lid (165° for DXN1)**
- **ØD = Maximum bore diameter**

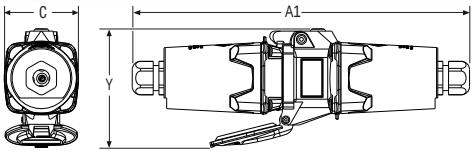

Inline connector (plug connected in a coupler socket)

	A1	C	Y
DXN1	266	58	89
DXN3	290	74	152
DXN6	350	84	122

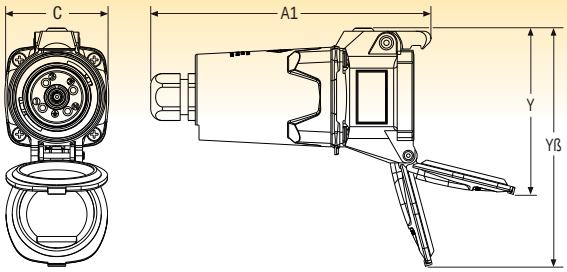

Coupler socket

	A1	C	Y	Yß
DXN1	158	58	89	134
DXN3	182	74	148	179
DXN6	211	84	122	195

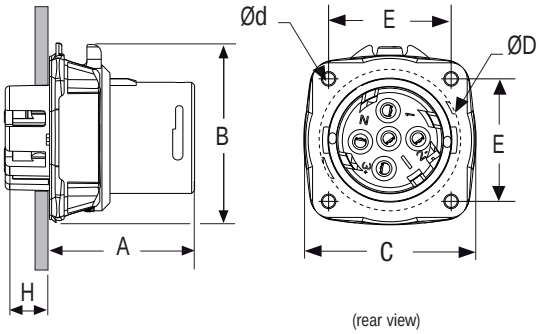

Inlet

	A	B	C	E	H	Ød	ØD max.
DXN1	50	61	58	42	15	4,5	45
DXN3	52	74	70	48	23	5	57
DXN6	58	88	80	55	41	5	68

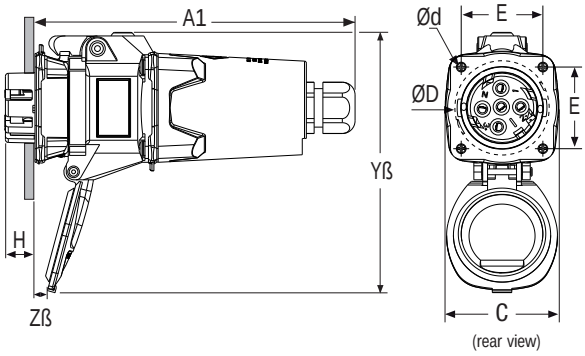

Coupler-socket connected in an inlet

	A1	C	E	H	Yß	Zß	Ød	ØD max.
DXN1	165	58	42	15	134	5	4,5	45
DXN3	184	74	48	23	179	45	5	57
DXN6	218	84	55	41	195	29	5	68

Note : use ONLY 180° opening lid (165° for DXN1)

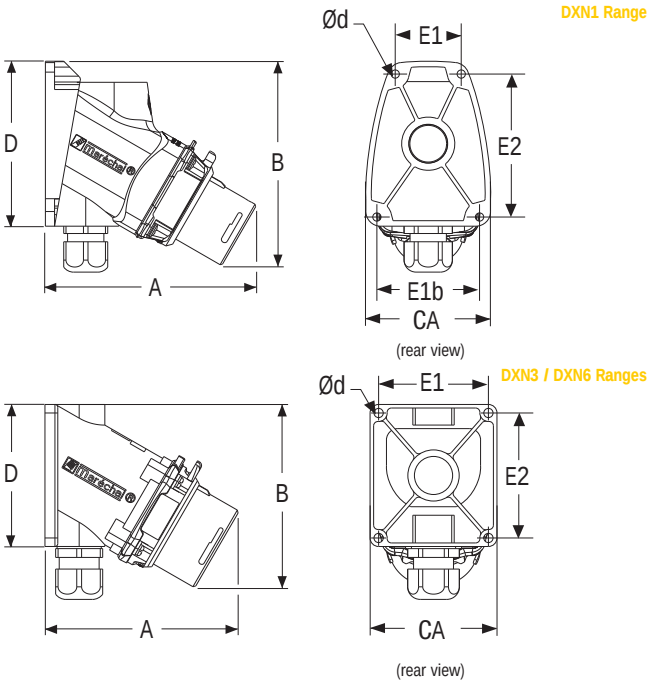

30° wall mounting appliance inlet

	A	B	CA	D	E1	E1b	E2	Ød
DXN1	115	111	68	90	36	56	78	4,5
DXN3	115	109	84	84	70	-	70	6
DXN6	136	128	89	100	77	-	88	6,5

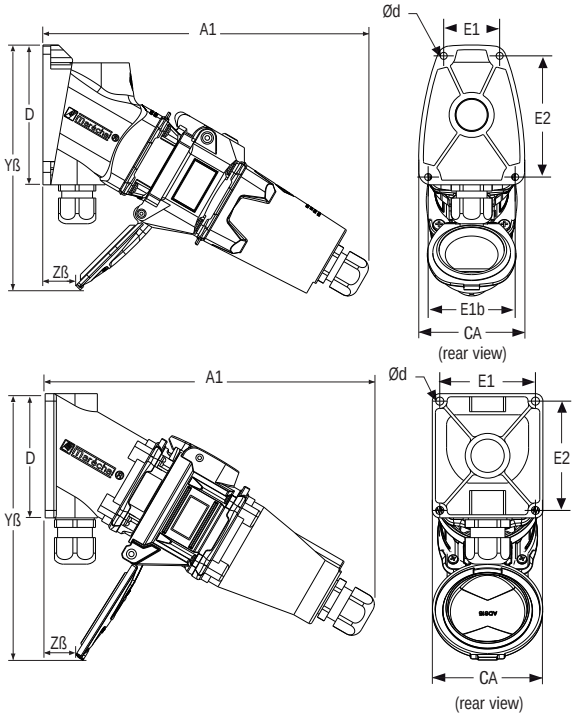

Coupler-socket connected in a 30° wall mounting appliance inlet

	A1	CA	D	E1	E1b	E2	Yß	Zß	Ød
DXN1	209	68	90	36	56	78	158	21	4,5
DXN3	221	84	84	70	-	70	198	31	6
DXN6	265	89	100	77	-	88	214	25	6,5

Note : use ONLY 180° opening lid (165° for DXN1)

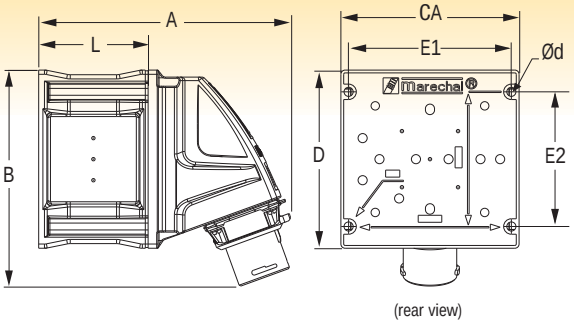

70° wall mounting appliance inlet

	A	B	CA	D	E1	E2	L	Ød
DXN1	179	154	128	128	116	96	78	6,5
DXN3	183	159	128	128	116	96	78	6,5
DXN6	210	203	170	170	158	139	78	6,5

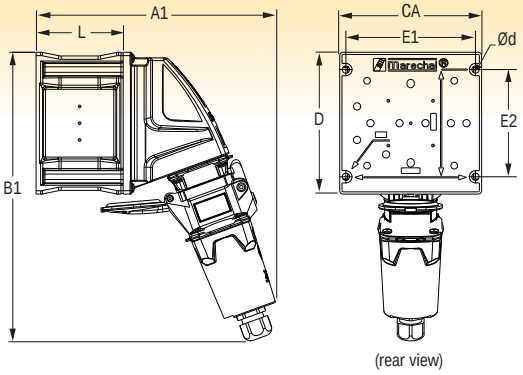

Coupler-socket connected in a 70° wall mounting appliance inlet

	A1	B1	CA	D	E1	E2	L	Ød
DXN1	214	258	128	128	116	96	78	6,5
DXN3	219	277	128	128	116	96	78	6,5
DXN6	251	347	170	170	158	139	78	6,5

Note : use ONLY 180° opening lid (165° for DXN1)

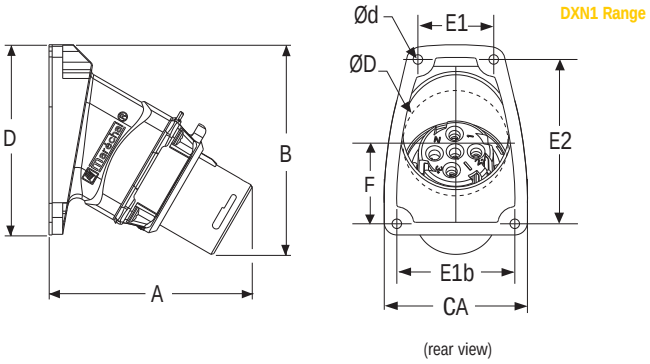

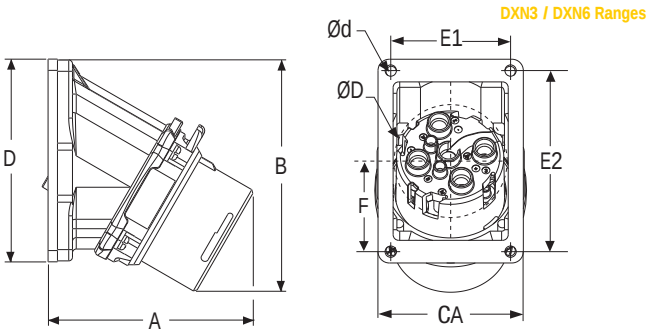

30° inclined appliance inlet

	A	B	CA	D	E1	E1b	E2	F	Ød	ØD max.
DXN1	95	100	68	90	36	56	78	38	4,5	50
DXN3	99	115	77	108	63	-	95	37	5,5	60
DXN6	109	124	77	108	63	-	95	47,5	5,5	60

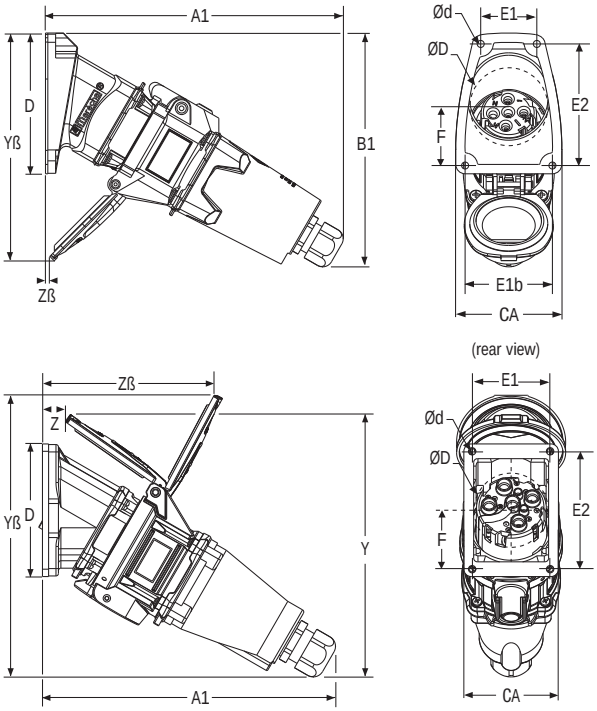

Coupler-socket connected in a 30° inclined appliance inlet

	A1	B1	CA	D	E1	E1b	E2	F	Y	Yß	Z	Zß	Ød	ØD
DXN1	191	150	68	90	36	56	78	38	-	146	-	1,5	4,5	50
DXN3	205	167	77	108	63	-	95	37	204	15	5,5	60		
DXN6	239	190	77	108	63	-	95	47,5	214	229	19	140	5,5	60

Note : for DXN1, use ONLY 165° opening lid (180° for DXN3)

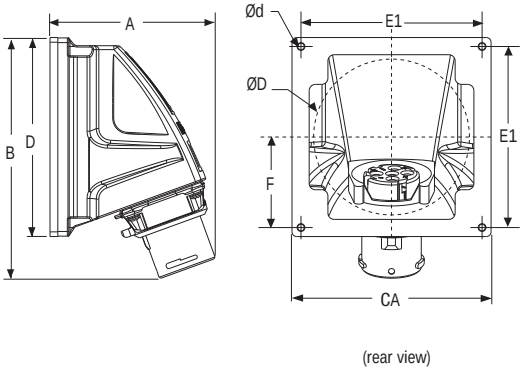

70° inclined appliance inlet

	A	B	CA	D	E1	F	Ød	ØD max.
DXN1	106	154	128	128	116	58	5	100
DXN3	110	159	128	128	116	58	5	100
DXN6	137	203	170	170	159	79,5	5	145

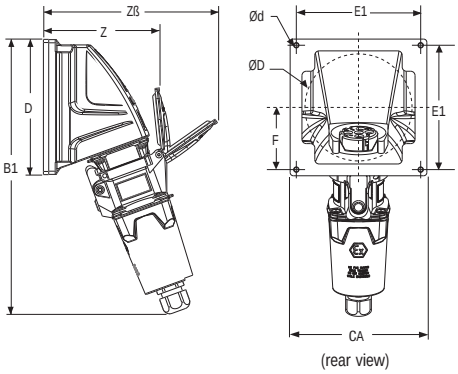

Coupler-socket connected in a 70° inclined appliance inlet

	B1	CA	D	E1	F	Z	Zß	Ød	ØD max.
DXN1	259	128	128	116	58	105	164	5	100
DXN3	278	128	128	116	58	155	207	5	100
DXN6	347	170	170	159	79,5	130	233	5	145

DX

20 A
32 A
63 A
125 A
200 A

- **Explosive atmospheres**
- **IP 65 as standard**
- **Up to 200 A**
- **Metal casing**

SPECIFICATION

IP65 plug and socket-outlet for explosive atmospheres (ATEX) with integral switching device, comply with BECMA international standard.

Product technical data sheet at: www.marechal.com

DX decontactors are designed for explosive atmospheres, with 'de' protection mode. They comply with the ATEX 94/9/CE & 99/92/CE directives. They can be used in zones 1 & 2 (Gas) and zones 21 & 22 (Dust). They are certified according to IEC Ex.

Mechanical features

- Enclosure "d": during connection and disconnection, electric arc is contained

Interior moulding in the rest position: Cut view of the explosion-proof chamber.

- Aluminium casing
- IK10 resistance to shocks
- External male contacts: these pins engage with the spring-loaded silver-nickel butt contacts inside the socket
- IP65 lid
- ON/OFF indicator
- Design ensures conformity to interlock standard EN 60309-4 : no live contacts.

Connection :

Socket-outlet with a plug contact engaged: Closing of the dead butt-contact(s) ; unlocking of the interior moulding.

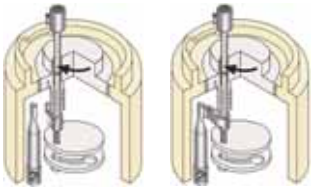

Plug rotation: Tensioning of switch springs. Sudden closure of switch contacts.

Disconnection :

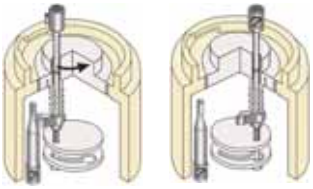

Reversed rotation of the plug: Sudden opening of the switch contacts. Return of the plug to its "off" parked position.

METAL Ex DECONTACTOR™

Locking with Allen key

Sugar silo

Operation for connection

Aviation maintenance hangar

Technical features

Plugs and sockets with load-break capability (integral switching device according to article 2.8 of EN 60309-1)

	DX1	DX3	DX6	DX9	DX2
Rated current (In)	20 A	32 A	63 A	125 A	200 A
Umax	750 V	750 V	750 V	750 V	750 V
Keying positions ([1])	12	12	12	12	12
Ambient temperature	-25 °C ≤ Ta ≤ +60 °C (for DX1 & DX3)		-40 °C ≤ Ta ≤ +60 °C (for DX6, DX9 & DX2)		
Protection	“de”	“de”	“de”	“de”	“de”
ATEX zones	Zones 1 & 2 (gas) Zones 21 & 22 (dusts) - for all DX range				

([1]) To discriminate between different power supplies and applications

Regulatory features

DX decontactors comply with:

- The ATEX 94/9/CE & 99/92/CE directives,
- CEI 60079-0 (2006), CEI 60079-1 (2003), CEI 60079-7 (2006), CEI 61241-0 (2004) & CEI 61241-1 (2004) International standards,
- CEI 60309-1 & CEI 60309-4 European and International standards (plugs and socket-outlets for industrial purposes),
- The European Low Voltage Directive 2006/95/CE,
- The European ‘Machine Directive’ regarding equipment isolation,
- The French NF C 15-100 standard,
- The French decree n°88-1056 dated 14th November 1988,
- The decrees relating to workers’ protection in Belgium, Spain and Italy.

Also certified by VERITAS LCIE.

DX1 DECONTACTOR™ METAL CASING

up to 20 A — IP65

Typical configuration:

Wall mounting socket

Wall box
26 2A B53

+

Socket-outlet
26 24 017

Plug

Plug
26 21 017

Plugs and sockets with load-break capability (integral switching device according to article 2.8 of EN 60309-1)

Conformity to EN 60309-4
Interlock standard: no live contacts in the socket

Other voltages and polarities are available on request

Temperature :

DX1 is T5 up to +60 °C and T6 up to + 50°C.

MARECHAL ELECTRIC MAROMME
Ⓔx II2 G/D Ex de IIC tD A21
-25 °C ≤ Ta ≤ +60 °C T5 T84 °C
-25 °C ≤ Ta ≤ +50 °C T6 T74 °C
IECEx LCI 09.0014 / LCIE 05 ATEX 6127

Main features:

Rated current (with wiring according to standard)	20 A	Flexible wiring (min - max)	2,5 - 10 mm²
Maximum voltage	750 V	Stranded wiring (min - max)	2,5 - 10 mm²
IP protection lid closed	IP65	Other wiring on request	
IP protection connected plug	IP65	Keying positions	12
Resistance to shocks	IK10	Protection mode	de
Ambient temperature	-25 °C to +60 °C	ATEX zones	1 & 2, 21 & 22

Socket-outlet (female)

Voltage 50 Hz	Polarity	Part no.
220 - 250 V	1P+N+E	26 24 015
380 - 440 V	**3P+E**	**26 24 013**
380 - 440 V	**3P+N+E**	**26 24 017**

Inlet (male)

Voltage 50 Hz	Polarity	Part no.
220 - 250 V	1P+N+E	26 28 015
380 - 440 V	**3P+E**	**26 28 013**
380 - 440 V	**3P+N+E**	**26 28 017**

Boxes

Ex cable gland included

Wall box metal 90°

Cable gland entry	Part no.	
M20	**26 2A B53**	8 - 13 mm
M25	26 2A B53 25M	9 - 16 mm
M32	26 2A B53 32M	12 - 21 mm

Plug (male)

Ex cable gland included

Voltage 50 Hz	Polarity	Part no.	
220 - 250 V	1P+N+E	26 21 015	8-13 mm
380 - 440 V	**3P+E**	**26 21 013**	**8-13 mm**
380 - 440 V	**3P+N+E**	**26 21 017**	**8-13 mm**

Handle

Ex cable gland included

Straight metal

Cable gland entry	Part no.	
M20	**26 2A 963**	8 - 13 mm
M25	26 2A 953 25M	9 - 16 mm
M32	26 2A 953 32M	12 - 21 mm

Boxes

Ex cable gland included

Wall box metal 90°

Cable gland entry	Part no.	
M20	**26 2A B53**	8 - 13 mm
M25	26 2A B53 25M	9 - 16 mm
M32	26 2A B53 32M	12 - 21 mm

DX3 DECONTACTOR™ METAL CASING — up to 32 A — IP65

Typical configuration:

Wall mounting socket

Wall box
26 3A B53

+

Socket-outlet
26 34 017

Plug

Plug
26 31 017

Plugs and sockets with load-break capability (integral switching device according to article 2.8 of EN 60309-1)

Conformity to 60309-4
Interlock standard: no live contacts in the socket

Other voltages and polarities are available on request

Temperature :

DX3 is T5 up to +60 °C and T6 up to + 50°C.

Main features:

Rated current (with wiring according to standard)	32 A	Flexible wiring (min - max)	2,5 - 10 mm²
Maximum voltage	750 V	Stranded wiring (min - max)	2,5 - 10 mm²
IP protection lid closed	IP65	Other wiring on request	
IP protection connected plug	IP65	Keying positions	12
Resistance to shocks	IK10	Protection mode	de
Ambient temperature	-25 °C to +60 °C	ATEX zones	1 & 2, 21 & 22

Socket-outlet (female)

Voltage 50 Hz	Polarity	Part no.
220 - 250 V	1P+N+E	26 34 015
380 - 440 V	**3P+E**	**26 34 013**
380 - 440 V	**3P+N+E**	**26 34 017**

Inlet (male)

Voltage 50 Hz	Polarity	Part no.
220 - 250 V	1P+N+E	26 38 015
380 - 440 V	**3P+E**	**26 38 013**
380 - 440 V	**3P+N+E**	**26 38 017**

Boxes

Ex cable gland included

Wall box metal 90°

Cable gland entry	Part no.	
M20	26 3A B53 20M	8 - 13 mm
M25	**26 3A B53**	9 - 16 mm
M32	26 3A B53 32M	12 - 21 mm

Plug (male)

Ex cable gland included

Voltage 50 Hz	Polarity	Part no.	
220 - 250 V	1P+N+E	26 31 015	9-16 mm
380 - 440 V	**3P+E**	**26 31 013**	**9-16 mm**
380 - 440 V	**3P+N+E**	**26 31 017**	**9-16 mm**

Handle

Ex cable gland included

Straight metal

Cable gland entry	Part no.	
M20	26 3A 953 20M	8 - 13 mm
M25	**26 3A 963**	9 - 16 mm
M32	26 3A 953 32M	12 - 21 mm

Boxes

Ex cable gland included

Wall box metal 90°

Cable gland entry	Part no.	
M20	26 3A B53 20M	8 - 13 mm
M25	**26 3A B53**	9 - 16 mm
M32	26 3A B53 32M	12 - 21 mm

MARECHAL ELECTRIC MAROMME
Ex II2 G/D Ex de IIC tD A21
-25 °C ≤ Ta ≤ +60 °C T5 T84 °C
-25 °C ≤ Ta ≤ +50 °C T6 T74 °C
IECEx LCI 09.0014 / LCIE 05 ATEX 6127

DX6 DECONTACTOR™ METAL CASING

up to 63 A — IP65

Typical configuration:

Wall mounting socket

Wall box
26 6A B53

+

Socket-outlet
26 64 017

Plug

Plug
26 61 017

Plugs and sockets with load-break capability (integral switching device according to article 2.8 of EN 60309-1)

Conformity to 60309-4
Interlock standard: no live contacts in the socket

Other voltages and polarities are available on request

Temperature :

DX6 is T6 up to +50 °C and T5 up to + 60°C.

MARECHAL ELECTRIC MAROMME
Ⓔx II2 G/D Ex de IIC tD A21
-40 °C ≤ Ta ≤ +60 °C T5 T90 °C
-40 °C ≤ Ta ≤ +50 °C T6 T80 °C
IECEx LCI 09.0015 / LCIE 04 ATEX 6038

Main features:

Rated current (with wiring according to standard)	63 A	Flexible wiring (min - max)	16 - 50 mm²
Maximum voltage	750 V	Stranded wiring (min - max)	16 - 50 mm²
IP protection lid closed	IP65	Other wiring on request	
IP protection connected plug	IP65	Keying positions	12
Resistance to shocks	IK10	Protection mode	de
Ambient temperature	-40 °C to +60 °C	ATEX zones	1 & 2, 21 & 22

Socket-outlet (female)

Voltage 50 Hz	Polarity	Part no.
220 - 250 V	1P+N+E	26 64 015
380 - 440 V	**3P+E**	**26 64 013**
380 - 440 V	**3P+N+E**	**26 64 017**

Inlet (male)

Voltage 50 Hz	Polarity	Part no.
220 - 250 V	1P+N+E	26 68 015
380 - 440 V	**3P+E**	**26 68 013**
380 - 440 V	**3P+N+E**	**26 68 017**

Boxes

Ex cable gland included

Wall box metal 90°

Cable gland entry	Part no.	
M25	26 6A B53 25M	9 - 16 mm
M32	**26 6A B53**	12 - 21 mm
M40	26 6A B53 40M	16 - 27 mm

Plug (male)

Ex cable gland included

Voltage 50 Hz	Polarity	Part no.	
220 - 250 V	1P+N+E	26 61 015	12-21 mm
380 - 440 V	**3P+E**	**26 61 013**	**12-21 mm**
380 - 440 V	**3P+N+E**	**26 61 017**	**12-21 mm**

Handle

Ex cable gland included

Straight metal

Cable gland entry	Part no.	
M25	26 6A 953 25M	9 - 16 mm
M32	**26 6A 963**	12 - 21 mm
M40	26 6A 953 40M	16 - 27 mm

Boxes

Ex cable gland included

Wall box metal 90°

Cable gland entry	Part no.	
M25	26 6A B53 25M	9 - 16 mm
M32	**26 6A B53**	12 - 21 mm
M40	26 6A B53 40M	16 - 27 mm

DX9

DECONTACTOR™

METAL CASING

up to 125 A — IP65

Typical configuration:

Wall mounting socket

Wall box
26 9A B53

+

Socket-outlet
26 94 017

Plug

Plug
26 91 017

Plugs and sockets with load-break capability (integral switching device according to article 2.8 of EN 60309-1)

Conformity to 60309-4
Interlock standard: no live contacts in the socket

Other voltages and polarities are available on request

Temperature :

DX9 is T6 up to +50 °C and T5 up to + 60°C.

• Socket padlockable with plug in or out

MARECHAL ELECTRIC MAROMME
Ex II2 G/D Ex de IIC tD A21
-40 °C ≤ Ta ≤ +60 °C T5 T90 °C
-40 °C ≤ Ta ≤ +50 °C T6 T80 °C
IECEx LCI 09.0015 / LCIE 04 ATEX 6038

Main features:

Rated current (with wiring according to standard)	125 A	Flexible wiring (min - max)	50 - 70 mm²
Maximum voltage	750 V	Stranded wiring (min - max)	50 - 70 mm²
IP protection lid closed	IP65	Other wiring on request	
IP protection connected plug	IP65	Keying positions	12
Resistance to shocks	IK10	Protection mode	de
Ambient temperature	-40 °C to +60 °C	ATEX zones	1 & 2, 21 & 22

Socket-outlet (female)

Voltage 50 Hz	Polarity	Part no.
380 - 440 V	**3P+E**	**26 94 013**
380 - 440 V	**3P+N+E**	**26 94 017**

Inlet (male)

Voltage 50 Hz	Polarity	Part no.
380 - 440 V	**3P+E**	**26 98 013**
380 - 440 V	**3P+N+E**	**26 98 017**

Boxes

Ex cable gland included

Wall box metal 90°

Cable gland entry	Part no.	
M32	26 9A B53 32M	12 - 21 mm
M40	**26 9A B53**	16 - 27 mm
M50	26 9A B53 50M	23 - 35 mm
M63	26 9A B53 63M	36 - 48 mm

Plug (male)

Ex cable gland included

Voltage 50 Hz	Polarity	Part no.	
380 - 440 V	**3P+E**	**26 91 013**	**16-27 mm**
380 - 440 V	**3P+N+E**	**26 91 017**	**16-27 mm**
380 - 440 V	**3P+E**	**26 91 013 50M**	**23-35 mm**
380 - 440 V	**3P+N+E**	**26 91 017 50M**	**23-35 mm**
380 - 440 V	**3P+E**	**26 91 013 63M**	**36-48 mm**
380 - 440 V	**3P+N+E**	**26 91 017 63M**	**36-48 mm**

Handle

Ex cable gland included

Straight metal

Cable gland entry	Part no.	
M32	26 9A 953 32M	12 - 21 mm
M40	**26 9A 963**	16 - 27 mm
M50	26 9A 953 50M	23 - 35 mm
M63	26 9A 953 63M	36 - 48 mm

Boxes

Ex cable gland included

Wall box metal 90°

Cable gland entry	Part no.	
M32	26 9A B53 32M	12 - 21 mm
M40	**26 9A B53**	16 - 27 mm
M50	26 9A B53 50M	23 - 35 mm
M63	26 9A B53 63M	36 - 48 mm

DX2 DECONTACTOR™ METAL CASING

up to 200 A — IP65

Typical configuration:

Wall mounting socket

Wall box
26 9A B53 Z0357

+

Socket-outlet
26 94 017 Z0357

Plug

Plug
26 91 017 Z0357

Main features:

Rated current (with wiring according to standard)	200 A
Maximum voltage	750 V
IP protection lid closed	IP65
IP protection connected plug	IP65
Resistance to shocks	IK10
Ambient temperature	-40 °C to +60 °C

Flexible wiring	70 mm²
Stranded wiring	70 mm²
Other wiring on request	
Keying positions	12
Protection mode	de
ATEX zones	1 & 2, 21 & 22

Plugs and sockets with load-break capability (integral switching device according to article 2.8 of EN 60309-1)

Conformity to 60309-4
Interlock standard: no live contacts in the socket

Other voltages and polarities are available on request

Temperature :

DX2 is T3 up to +60 °C

Socket-outlet (female)

Voltage 50 Hz	Polarity	Part no.
380 - 440 V	**3P+E**	**26 94 013 Z0357**
380 - 440 V	**3P+N+E**	**26 94 017 Z0357**

Inlet (male)

Voltage 50 Hz	Polarity	Part no.
380 - 440 V	**3P+E**	**26 98 013 Z0357**
380 - 440 V	**3P+N+E**	**26 98 017 Z0357**

Boxes

Ex cable gland included

Wall box metal 90°

Cable gland entry	Part no.	
M63	**26 9A B53 Z0357**	36 - 48 mm

Plug (male)

Ex cable gland included

Voltage 50 Hz	Polarity	Part no.
380 - 440 V	**3P+E**	**26 91 013 Z0357** 36-48mm
380 - 440 V	**3P+N+E**	**26 91 017 Z0357** 36-48mm

Handle

Ex cable gland included

Straight metal

Cable gland entry	Part no.	
M63	**26 9A 963 Z0357**	36 - 48 mm

Boxes

Ex cable gland included

Wall box metal 90°

Cable gland entry	Part no.	
M63	**26 9A B53 Z0357**	36 - 48 mm

MARECHAL ELECTRIC MAROMME
Ex II2 G/D Ex de IIC tD A21
-40 °C ≤ Ta ≤ +60 °C T3 T91 °C
IECEx LCI 09.0015 / LCIE 04 ATEX 6038

CRIC TERMINALS

from 2 x 1,5 to 2 x 120 mm²

Main features:

Section	from 2 x 1,5 to 2 x 120 mm²
Protection mode	e
ATEX zones	1 & 2, 21 & 22

- Spring-assisted tightening (even after copper yield)
- Vibration-resistant, thermal cycling-resistant and anti-shearing terminals
- Compliant with the NFC 20-110 standard
- Compliant with the 'e' safety standards (thanks to the insulated base)

The CRIC terminals are characterised by:
- special screw threading,
- perfectly tight: no tool required,
- a spring placed inside the terminal head compensates for strand settlement and copper yield.

Terminal		insulated with fixing part	insulated + scew with rear part	earth with threaded hole	earth + screw with rear part	earth + screw with threaded hole	insulated without fixing part
	Wiring						
T6	2 x 1,5 mm² to 2 x 6 mm²	**6TA 6**	**6TB 6**	**6TD 6**	**6TE 6**	**6TF 6**	**6TV 6**
T16	2 x 4 mm² to 2 x 16 mm²	**6TA 16**	**6TB 16**	**6TD 16**	**6TE 16**	**6TF 16**	**6TV 16**
T35	2 x 6 mm² to 2 x 35 mm²	**6TA 35**	**6TB 35**	**6TD 35**	**6TE 35**	**6TF 35**	**6TV 35**
B70	2 x 25 mm² to 2 x 70 mm²	**6BA 70**	**6BB 70***	**6BD 70**	**6BE 70**	**6BF 70**	**-**
B120	2 x 50 mm² to 2 x 120 mm²	**6BA 120**	**6BB 120***	**6BD 120**	**6BE 120**	**6BF 120**	**-**

***** rod non insulated

B2X DISTRIBUTION BOXES

up to 750 V

This range is equipped with CRIC increased safety 'e' terminal blocks and cable gland and complies with the 94/9/CE directive (one M40 cable gland maximum per side).
All external fastenings are in stainless steel.

This box can be equipped with:
- Two DXN1 with 30° inclined sleeve, or
- One DXN1 and one DXN3 with 30° inclined sleeves, or
- One DXN6 with 70° inclined sleeve.

Code compliance
- The European ATEX 94/9/CE directive
- EN 60079-0, EN 60079-7, EN 61241-0, EN 61241-1

Wiring
Three kinds of increased safety 'e' terminal blocks are available:
- 20 A : 3 x 4 mm² max. per terminal block
- 40 A : 3 x 10 mm² max. per terminal block
- 70 A : 3 x 25 mm² max. per terminal block

B2X equipped with two DXN1 (shown) or one DXN1 and one DXN3

Main features:

Maximum voltage	750 V
Ambient temperature	-40 °C to +60 °C
Protection mode	e
ATEX zones	1 & 2, 21 & 22
IP protection	IP66/IP67
Dimensions (H x W x D)	173 x 173 x 118 mm

Boxes fitted with terminals only

MARECHAL ELECTRIC MAROMME
Ex II2 G/D Ex e II tD A21
-40 °C ≤ Ta ≤ +60 °C T6 T85 °C
LCIE 05 ATEX 6128

Boxes fitted with terminals + DXN

MARECHAL ELECTRIC MAROMME
Ex II2 G/D Ex e II tD A21
-40 °C ≤ Ta ≤ +60 °C T6 T85 °C
-40 °C ≤ Ta ≤ +60 °C T4 T130 °C
LCIE 05 ATEX 6128

PXN 12C

MULTICONTACT CONNECTORS

METAL CASING

IP65
IP66

Typical configuration:

Wall mounting socket

Socket-outlet
06 M0111

Plug

Plug
06 M1111

ATEX connector complying with International and European safety regulations, in particular to 94/9/CE ATEX directive.

Main features :

Number of contacts	11P + E
Nominal current	10 A
Maximum voltage	220 V
IP protection lid closed	IP65/IP66
IP protection connected plug	IP65/IP66
Resistance to shocks	IK09

Ambient temperature	-40 °C to +55 °C
Flexible wiring (min - max)	1,5 - 2,5 mm²
Wiring	solder
Protection mode	e
ATEX Zones	1 & 2, 21 & 22

- **Lockable socket using triangular key (supplied).**
- **Metal casing anti-corrosion treated.**

Wall mounting socket (female)

Ex cable gland	Part no.	
M25	06 M0111 25M	9 - 16 mm
M32	**06 M0111**	12 - 21 mm

Triangular key included

Inclined socket (female)

	Part no.
	06 M7111

Triangular key included

Temperature :

PXN12C is T5 up to +55 °C

Coupler socket (female)

Ex cable gland	Part no.	
M25	06 M3111 25M	9 - 16 mm
M32	**06 M3111**	12 - 21 mm

Triangular key included

Plug (male)

Ex cable gland	Part no.	
M25	06 M1111 25M	9 - 16 mm
M32	**06 M1111**	12 - 21 mm

Wall mounting appliance inlet (male)

Ex cable gland	Part no.	
M25	06 M6111 25M	9 - 16 mm
M32	**06 M6111**	12 - 21 mm

Inclined appliance inlet (male)

	Part no.
	06 M9111

MARECHAL ELECTRIC MAROMME
Ⓔx II2 G/D Ex e II tD A21
-40 °C ≤ Ta ≤ +55 °C T5 T69 °C
LCIE Ex 07.010 X / LCIE 07 ATEX 6070 X

DXN 37C

MULTICONTACTS CONNECTORS

METAL CASING

IP66 IP67

Typical configuration:

Wall mounting socket

Plug

Socket-outlet
36 M0361

Plug
36 M1361

ATEX connector complying with International and European safety regulations, in particular to 94/9/CE ATEX directive.

Main features :

Number of contacts	36P + E	Ambient temperature	-40 °C to +60 °C
Nominal current	10 A	Flexible wiring (mini - max)	1,5 - 2,5 mm² (5 A)
Maximum voltage	220 V	Flexible wiring (mini - max)	2,5 mm² (10 A)
IP protection lid closed	IP66/IP67	Wiring	solder
IP protection connected plug	IP66/IP67	Protection mode	e
Resistance to shocks	IK09	ATEX Zones	1 & 2, 21 & 22

- **Socket padlockable with plug in or out**
- **Metal casing anti-corrosion treated.**

Wall mounting socket (female)

Ex cable gland	Part no.	
M32	36 M0361 32M	12 - 21 mm
M40	**36 M0361**	16 - 27 mm

With padlocking shaft (padlock not included)

Plug (male)

Ex cable gland	Part no.	
M32	36 M1361 32M	12 - 21 mm
M40	**36 M1361**	16 - 27 mm

Inclined socket (female)

	Part no.
	36 M7361

With padlocking shaft (padlock not included)

Temperature :

DXN37C is T6 up to +40 °C and T5 up to +60 °C.

Wall mounting appliance inlet (male)

Ex cable gland	Part no.	
M32	36 M6361 32M	12 - 21 mm
M40	**36 M6361**	16 - 27 mm

Coupler socket (female)

Ex cable gland	Part no.	
M32	36 M3361 32M	12 - 21 mm
M40	**36 M3361**	16 - 27 mm

With padlocking shaft (padlock not included)

Inclined appliance inlet (male)

	Part no.
	36 M9361

MARECHAL ELECTRIC MAROMME
Ex II2 G/D Ex e II tD A21
-40 °C ≤ Ta ≤ +40 °C T6 T46 °C
-40 °C ≤ Ta ≤ +60 °C T5 T66 °C
LCIE Ex 07.011 X / LCIE 07 ATEX 6071 X

SPeX

SINGLE POLE POWER CONNECTOR WITH PILOT

up to 680 A — 1000 V

Typical configuration:

Inclined socket

Lug
454 A95 C

+

Socket-outlet
4647 00N

Plug

Lug
454 A95 D

+

Plug
4641 00N 32P

Connector with locking mechanism and electromechanical break.

5 different mechanical keying of (L1, L2, L3, N, E)

Visual identification by standardized colours for each country

Part numbers (listed in table) are valid for Europe and Japan.

Other countries:
Replace prefix 46 with...

42- (USA) Example:
Socket-outlet L1 = 4247 001

43- (Australia) Example :
Plug L3 = 4341 003 32P

44- (UK and South-Africa) Example :
Earth socket = 4447 00T

BUREAU VERITAS MARINE

Main features :

Nominal current	according to category and cable	Resistance to shocks	IK08
AC maximum voltage	1000 V	Ambient temperature	see opposite table
DC maximum voltage	1500 V	Stranded wiring (min - max)	see opposite table
Short-circuit current Icc	20 kA for 250 ms	Keying position	mechanical (5) and visual
IP protection lid closed	IP65/IP66	Protection mode	e
IP protection connected plug	IP65/IP66	ATEX Zones	1 & 2, 21 & 22

Number of operations	2000
Pre-wired pilot circuit	6 A / 220 V

Socket-outlet without lug

Type	Part no.
L1	4647 001
L2	4647 002
L3	4647 003
Neutral	4647 00N
Earth	4647 00T
Positive	4647 00P
Negative	4647 00M

Plug without lug

Type	Part no.			
Cable dia.	*18 to 25 mm*	*24 to 34 mm*	*34 to 42 mm*	*40 to 48 mm*
L1	4641 001 32P	4641 001 40P	4641 001 50P	4641 001 63P
L2	4641 002 32P	4641 002 40P	4641 002 50P	4641 002 63P
L3	4641 003 32P	4641 003 40P	4641 003 50P	4641 003 63P
Neutral	4641 00N 32P	4641 00N 40P	4641 00N 50P	4641 00N 63P
Earth	4641 00T 32P	4641 00T 40P	4641 00T 50P	4641 00T 63P
Positive	4641 00P 32P	4641 00P 40P	4641 00P 50P	4641 00P 63P
Negative	4641 00M 32P	4641 00M 40P	4641 00M 50P	4641 00M 63P

Crimping Lug

Selection of ferule depends on the cable: the cross-section of the flexible cable mentioned in the above table is for information only. Please check dimensions as these may vary according to cables and manufacturers.

Wire cross-section (mm²)		Straight with hole	Straight threaded *	Diamètre intérieur (mm)
Flexible	Stranded	Part no.	Part no.	
50	70	454 A50 C	454 A50 D	11
70	95	454 A70 C	454 A70 D	13,1
95	120	454 A95 C	454 A95 D	14,5
120	150	454 A12 C	454 A12 D	16,2
150	185	454 A15 C	454 A15 D	18
185	240	454 A18 C	454 A18 D	20,6
240	300	454 A24 C	454 A24 D	23,1
300	400	454 A30 C	454 A30 D	26,1
400	500	454 A40 C	454 A40 D	29,2

* *Wiring with lugs to crimp in compliance with NFC 20-130 / IEC 1238-1 (for VDE 0220 standard, please consult us)*

Crimping: double hexagonal crimping is recommended.

MARECHAL ELECTRIC MAROMME
Ex II2 G/D Ex e II tD A21
LCIE 07 ATEX 6073 X / LCIE Ex 07.012 X

The highest possible safety

- Reliable mechanical and electrical interlocking,
- IP2X socket-outlet when cap removed,
- Automatic IP65/IP66 when plug is connected.

An simple-to-use connector

- Straight insertion of the plug into the socket-outlet,
- Different mechanical keying for L1, L2, L3, N and E,
- Visual identification by standard colours,

Performance

- With 240 mm² wiring, the SPeX accepts a permanent current up to 570 A / 1000 V a.c. with T5 ATEX classification at 40 °C ambient temperature.

SPeX ATEX classification according to cable cross-section

	-20°C ≤ Ta ≤ +40°C G / D T5 / T56°C	-20°C ≤ Ta ≤ +40°C G / D T6 / T56°C	-20°C ≤ Ta ≤ +60°C G / D T5 / T76°C
70 mm²	290 A	235 A	235 A
95 mm²	415 A	335 A	335 A
120 mm²	456 A	376 A	376 A
150 mm²	493 A	415 A	415 A
185 mm²	530 A	450 A	450 A
240 mm²	570 A	497 A	497 A
300 mm²	620 A	540 A	540 A
400 mm²	680 A	600 A	600 A

Energy distribution system with separate connection of contacts

The pilot contact breaks the circuit in conformity with ATEX Directive (enhanced safety “e”)

Pilot wiring is mandatory to actvate an early break

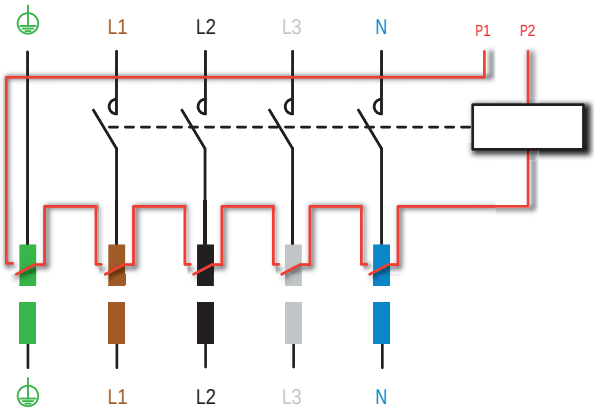

The breaking system is not supplied

Continental color coding

Type	
L1 - Brown	
L2 - Black	
L3 - Grey	
Neutral - Blue	
Earth - Green	
Positive - Red	
Negative - Black	

Colour coded to country standards

Automatic IP65/IP66 ingress protection (dust and powerful water jets)

Watertight seal

Silver-tipped butt-contact and ring ensure a perfect electrical connection

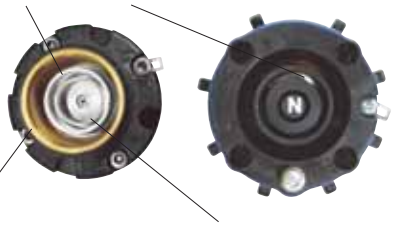

Metal retaining groove

Coding ring (each phase and the neutral and earth has a different diameter)

Dimensions

DX

Socket-outlet

	Z	D	H	BH	BB	B	ØA
DX1 / DX3	95	104	55	66	85	92	6,7
DX6 / DX9 / DX2	173	148	90	92	110	121	9

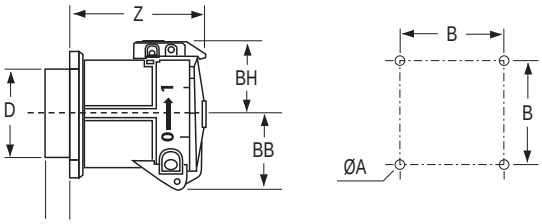

Wall mounting socket

	A1	B1	E	F	G	ØH
DX1 / DX3	270	125	90	145	118	9
DX6 / DX9 / DX2	418	175	130	195	170	9

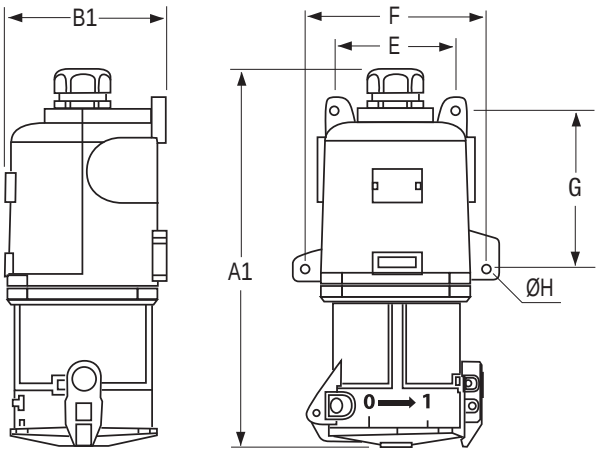

Plug connected in a wall mounting socket

	A1	B1
DX1 / DX3	387	125
DX6 / DX9 / DX2	603	175

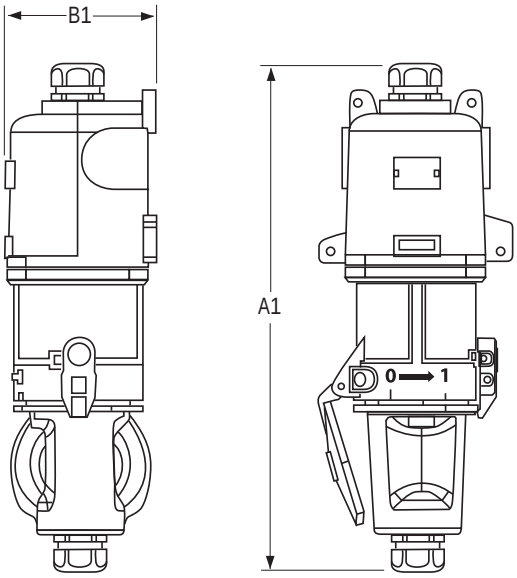

CRIC

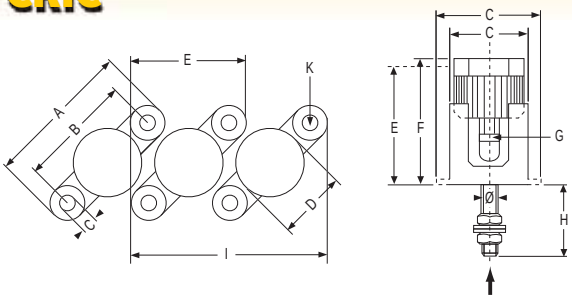

	A	B	C	D	E	F	G	H	I	K	Ø
6TA6/6TD6/6TV6	19	16	24	27	25	30	3X6		46	Ø3,5	M4
6TB6	19	16	24	27	25	30	3X6	23	46	Ø3,5	M4
6TE6	19	16	24	27	25	30	3X6	25	46	Ø3,5	M4
6TF6	19	16	24	27	25	30	3X6	5	46	Ø3,5	M4
6TA16/6TD16/6TV16	23	19	29	33	36	43	5X10		56	Ø4,5	M5
6TB16	23	19	29	33	36	43	5X10	22	56	Ø4,5	M5
6TE16	23	19	29	33	36	43	5X10	24,5	56	Ø4,5	M5
6TF16	23	19	29	33	36	43	5X10	5,5	56	Ø4,5	M5
6TA35/6TD35/6TV35	30	25	37	42	57	70	8X16		72	Ø5,5	M8
6TB35	30	25	37	42	57	70	8X16	29	72	Ø5,5	M8
6TE35	30	25	37	42	57	70	8X16	34	72	Ø5,5	M8
6TF35	30	25	37	42	57	70	8X16	7	72	Ø5,5	M8
6BA70/6BB70/6BD70/ 6BE70/6BF70	45		35	56	59	76	11X23			Ø5,5	Ø10

PXN 12C

Plug

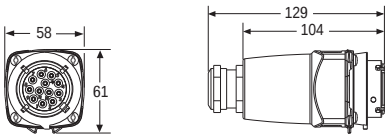

45° Wall mounting socket

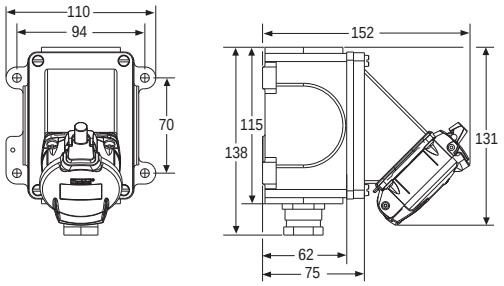

Plug connected / disconnected in a 45° wall mounting socket

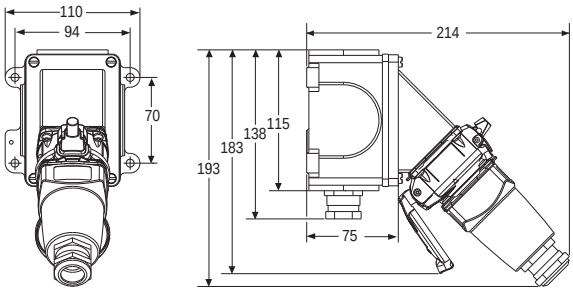

DXN 37C

Socket-outlet

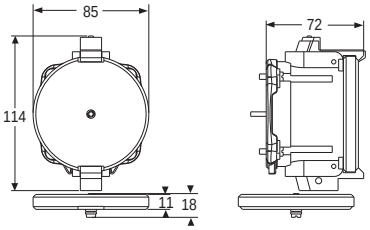

Plug

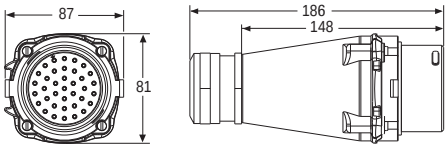

30° Wall mounting socket

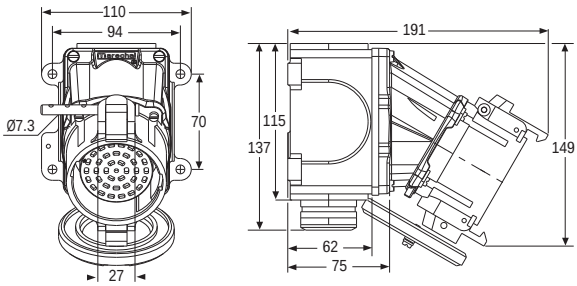

Plug connected / disconnected in a 30° wall mounting socket

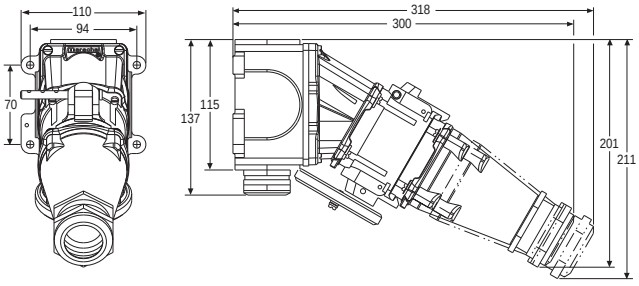

Dimensions

SPeX

Socket-outlet

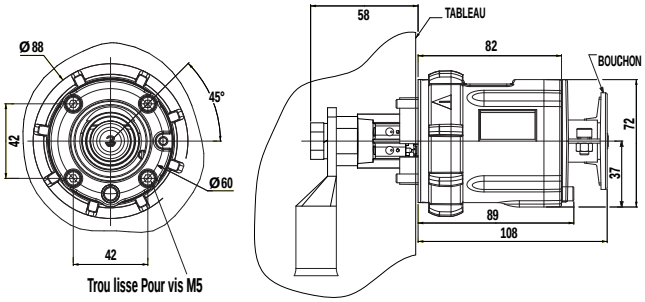

Plug connected in a socket-outlet

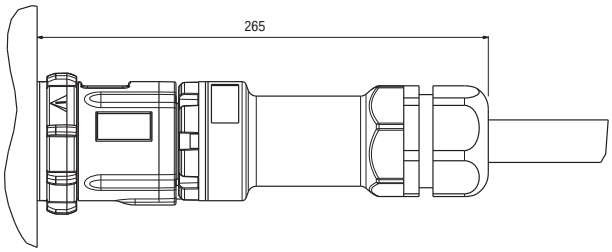

45° inclined socket

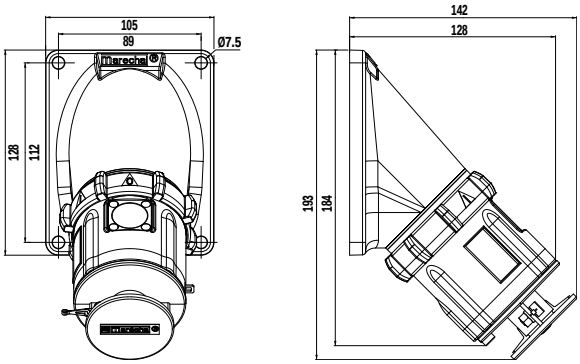

Plug connected in a 45° inclined socket

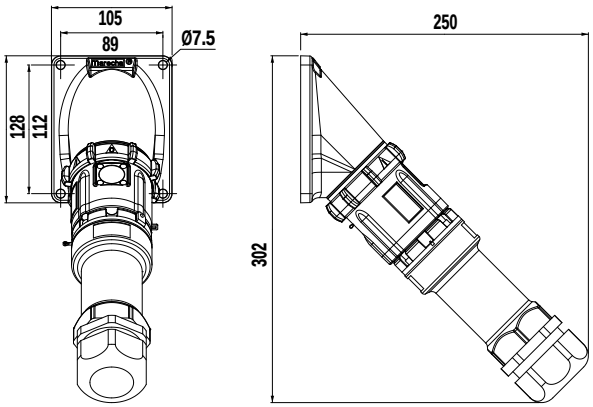

Inline connector

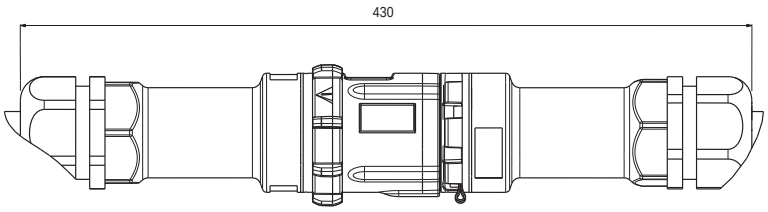

A 24 position unique keying system

Like all members of the BECMA association, Marechal Electric complies withthe common electric butt-contact plug and socket-outlet keying position chart :

Socket-outlet
(safety shutter open)

Plug

Voltage range covered	Frequency	Contact configuration	Keying position / Part no. (5th & 6th digit)
20 - 24 V	a.c. 50 Hz	All *	08
20 - 24 V	a.c. 60 Hz	All *	02
25 - 28 V	a.c. 60 Hz	All *	06
25 - 28 V	d.c.	Position to be assigned : please consult us	
40 - 48 V	a.c. 50 Hz	All *	13
40 - 48 V	d.c.	Position to be assigned : please consult us	
110 - 125 V	a.c. 60 Hz	1P+N+E	07
220-250 V	a.c. 60 Hz	2P+E, 3P+E, 3P+N+E	07
110 - 130 V	a.c. 50 Hz	1P+N+E	03
110 - 130 V	d.c.	2P+E, 2P+N+E	10
115 - 127 V	a.c. 400 Hz	1P+N+E	11
115 - 127 V	a.c. 200 Hz	1P+N+E	12
120 - 127 V	a.c. 60 Hz	1P+N+E	16
190 - 230 V	a.c. 50 Hz	2P+E, 3P+E, 3P+N+E	03
200 - 220 V	a.c. 400 Hz	2P+E, 3P+E, 3P+N+E	11
200 - 220 V	a.c. 200 Hz	2P+E, 3P+E, 3P+N+E	12
208 - 220 V	a.c. 60 Hz	2P+E, 3P+E, 3P+N+E	16
220 - 250 V	a.c. 50 Hz	1P+N+E	01
220 - 250 V	d.c.	2P+E, 2P+N+E	20
255 - 277 V	a.c. 60 Hz	1P+N+E	04
347 V	a.c. 60 Hz	1P+N+E	14
380 - 440 V	a.c. 50 Hz	2P+E, 3P+E, 3P+N+E	01
380 - 440 V	a.c. 50 Hz	1P+N+E	19
440 - 480 V	a.c. 60 Hz	2P+E, 3P+E, 3P+N+E	04
480 - 500 V	a.c. 50 Hz	2P+E, 3P+E, 3P+N+E	09
600 V	a.c. 60 Hz	2P+E, 3P+E, 3P+N+E	14
660 - 690 V	a.c. 50 Hz	2P+E, 3P+E, 3P+N+E	19

** All : a.c. = 1P+N, 2P, 2P+N, 3P, 3P+N, 1P+N+E, 2P+E, 3P+E, 3P+N+E*
d.c. = 2P, 2P+E

The colours in the above table correspond to the international voltage standard. They appear on the ring and voltage sticker of the socket-outlet or inlet, for easy identification of the device frequency/voltage combination.

There are 24 positions. Most have been assigned to a particular operating voltage :

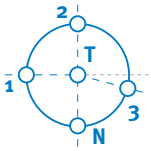

Position 01
220-250 V or 380-440 V 50 Hz

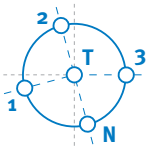

Position 02
20-24 V 60 Hz

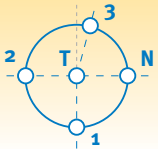

Position 03
110-130 V or 190-230 V 50 Hz

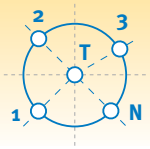

Position 04
255-277 V or 440-480 V 60 Hz

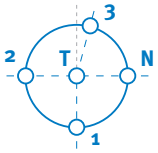

Position 06
25-28V 50 Hz or d.c.

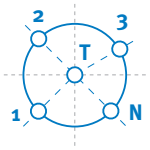

Position 07
110-125 V or 220-250 V 60 Hz

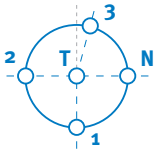

Position 08
20-24 V 50 Hz or d.c.

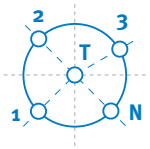

Position 09
480-500 V 50 Hz

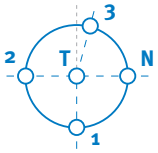

Position 10
110-130 V d.c.

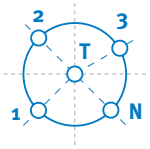

Position 11
115-127 V or 200-240 V 400 Hz

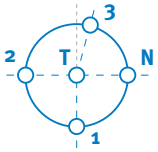

Position 12
115-127 V or 200-220 V 200 Hz

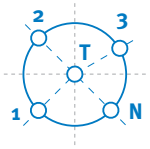

Position 13
40-48 V 50 Hz or d.c.

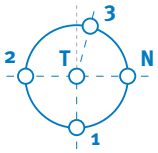

Position 14
347 V or 600 V 60 Hz

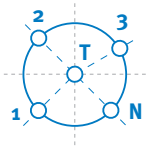

Position 16
120-127 V or 2080-220 V 60 Hz

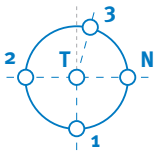

Position 19
380-440 V 50 Hz or
660-690 V 50 Hz or d.c.

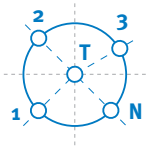

Position 20
220-250 V d.c.

Others are free, in order to address other voltages or fulfil specific needs.

This is more than a plug and socket ....

Marechal Electric's Ex DECONTACTOR™ is an ATEX approved plug and socket with an integral load-break isolating switch. Combining these functions into the same unit makes the decontactor a safe, reliable and compact disconnection device motors and power supplies in Ex atmosphere, saving you time and cost.
The decontactor is the ideal connection in Ex atmosphere.

Innovation for safety and flexibility

For over fifty years, the Marechal decontactor has been known for safety and flexibility. With 7% revenue spent on R&D, we continue to innovate and offer the products to meet the varying needs of our customers.

MARECHAL electric

United Kingdom & Eire
MARECHAL ELECTRIC S.A.
Tel. : 0844 804 2066
Fax : 0844 804 4231
www.marechal.com
e-mail : sales@marechal.co.uk

Head office
MARECHAL ELECTRIC S.A.
5, avenue de Presles
94417 Saint-Maurice Cedex- France
Tel. : +33 (0)1 45 11 60 00
Fax : +33 (0)1 45 11 60 60
www.marechal.com
e-mail : sales@marechal.fr

BECMA is an international association of manufacturers of butt-contact connectors. It is the only organisation that is able to guarantee that when a plug made by one member manufacturer is mated with a socket made by another complies with the European Low Voltage Directive.
BECMA oversees the compliance of mixed plugs and sockets between its members.
www.becma.ch

Anplaatex200912